

TRANS-AMF

AUTOMATIC MAINS FAILURE UNIT

1. Introduction

1.1 General Specifications

The unit provides for automatic transfer of a load from mains to generator in the event of a mains failure. It is able to detect failure of any phase of the mains and to start and switch over to a generator if the mains voltage goes outside pre-set limits. Both automatic and manual control is possible. A test mode is also available which allows the generator to be run without taking the load.

The unit has Dual Working feature. In the event of a mains failure, group with high priority starts and takes the load. If both groups has no priority, the group with less working hour will start and take the load. To use Dual Working feature Dual Set expansion module must be used.

The unit calculates engine RPM from Magnetic Pickup sensor (MPU) and/or generator voltage signal.

The unit monitors J1939 ECU messages and provides remote start/stop control via J1939 protocol

The unit monitors generator operation and gives warning of any faults that are detected.

The configurable input-3 can be used as the water level sensing input. **Note:** Only available at Trans-AMF_W unit.

The configurable input-7 can be used as the cabin temperature analog input. **Note:** Only available at Trans-AMF_C unit.

The unit has got the “Event Log” that will record last 500 events.

1.2 Warranty

EMKO Elektronik warrants that the equipment delivered is free from defects in material and workmanship. This warranty is provided for a period of two years. The warranty period starts from the delivery date. This warranty is in force if duty and responsibilities which are determined in warranty document and instruction manual performs by the customer completely.

1.3 Maintenance

Repairs should only be performed by trained and specialized personnel. Cut power to the device before accessing internal parts.
Do not clean the case with hydrocarbon-based solvents (Petrol, Trichlorethylene etc.). Use of these solvents can reduce the mechanical reliability of the device. Use a cloth dampened in ethyl alcohol or water to clean the external plastic case.

PRC Technologies Corp., Ltd. ลาดพร้าว 101 กรุงเทพ 10240
โทรศัพท์ : 02 530 1714, 02 932 1711 มือถือ : 086 360 8600
อีเมล : contact@prctech.net LINE ID1 : prctec-info, LINE ID2 : @prct

2. Installation

Before beginning installation of this product, please read the instruction manual and warnings below carefully.

A visual inspection of this product for possible damage occured during shipment is recommended before installation. It is your responsibility to ensure that qualified mechanical and electrical technicians install this product.

If there is danger of serious accident resulting from a failure or defect in this unit , power off the system and seperate the electrical connection of the device from the system.

Keep the power off until all of the wiring is completed so that electric shock and trouble with the unit can be prevented.

To reduce the effect of electrical noise on device, Low voltage line (especially sensor input cable) wiring must be separated from high current and voltage line.
If possible, use shielded cable and shield must be connected to ground only one side.

Before commissioning the device, parameters must be set in accordance with desired use. Incomplete or incorrect configuration can cause dangerous stiuations.

2.1 Unit Configuration

The unit can be programmed using the buttons and LCD display on the front panel or PC Software.

2.2 Panel Mounting

The unit is designed for panel mounting. Fixing is by two screw fixings.
1- Insert the unit in the panel cut-out from the front.
2- Insert the fixings in the slotted at the corners of the unit and tighten the fixing screws to secure the unit against the panel.

During the equipment is putted in hole on the metal panel while mechanical installation some metal burrs can cause injury on hands, you must be careful.

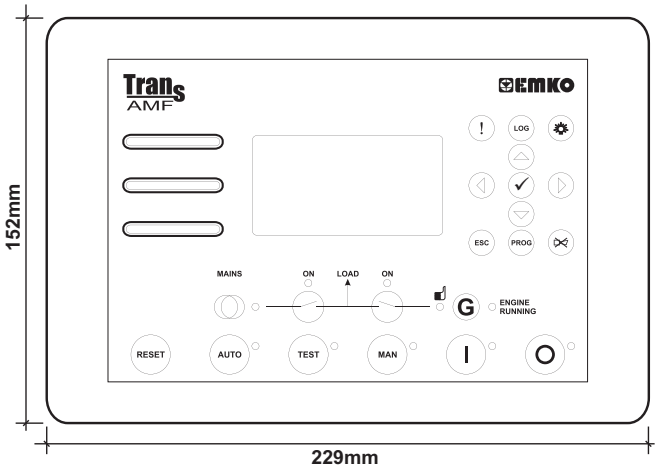

Figure 2.1 Front View

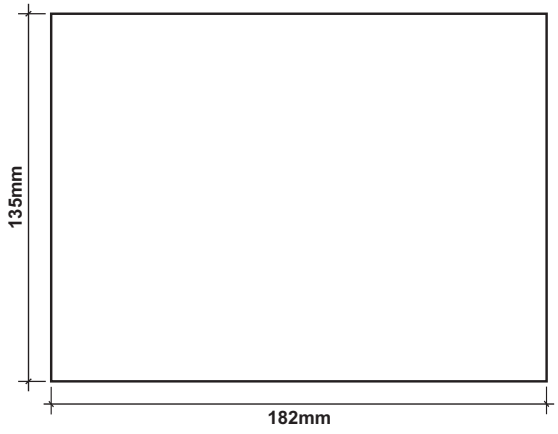

Figure 2.2 Panel Cut-Out

2.3 Electrical Connection

TRANS-AMF_W three phase connections schematic

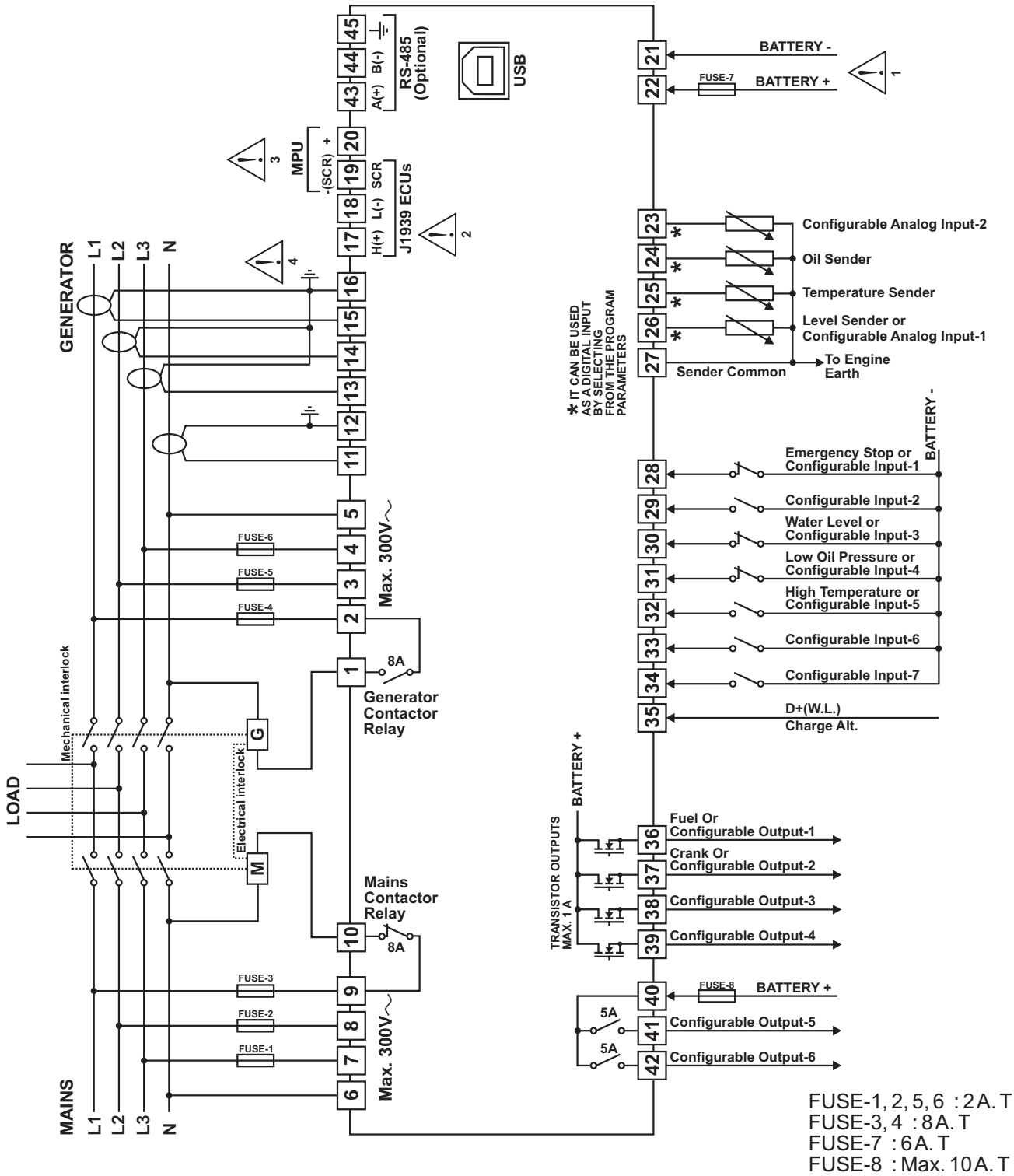

FUSE-1, 2, 5, 6 : 2 A. T
FUSE-3, 4 : 8 A. T
FUSE-7 : 6 A. T
FUSE-8 : Max. 10 A. T

1- Connect the unit as shown in the appropriate diagram. Be sure to connect the battery supply the right way round. External fuse is recommended. Stranded cable cross section: 1,5mm², Solid cable cross section: 2,5mm², The stripping length is 7 to 9 mm. Supply cables must comply with the requirements of IEC 60277 or IEC 60245.

2- The CAN interface requires that a 120 Ohms terminator is fitted to each end of the communications link. This termination resistor is fitted internally into the unit. So it is not required externally. Screened cable must be used for connecting the CAN, ensuring that the screen is grounded at one end ONLY.

3- Screened cable must be used for connecting the Magnetic Pickup, ensuring that the screen is grounded at one end ONLY.

4- Current transformers secondary should be grounded. The CT of 5VA is recommended. The unit has a burden of 0.5VA on the CT.

TRANS-AMF_C three phase connections schematic

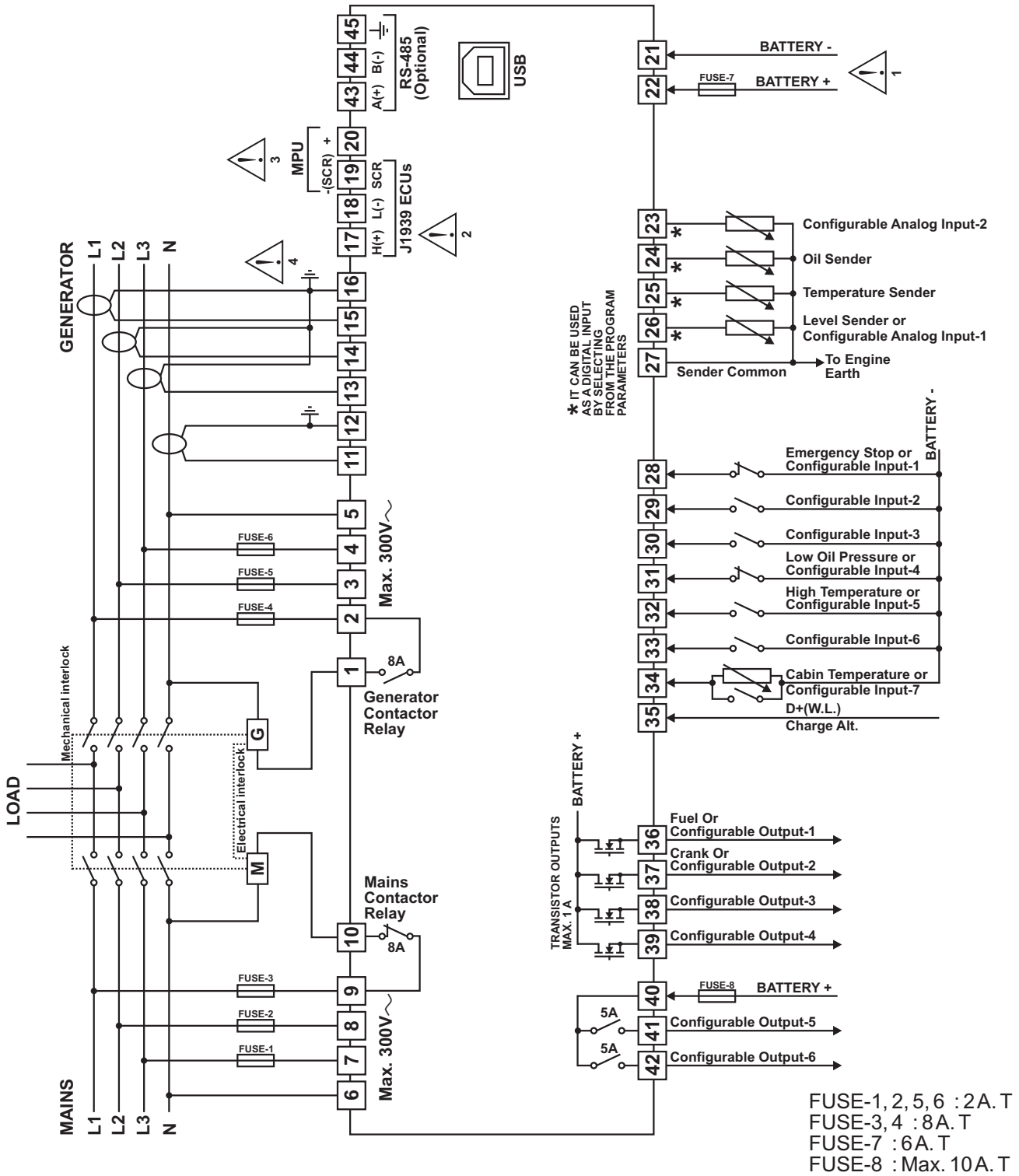

FUSE-1, 2, 5, 6 : 2 A. T
FUSE-3, 4 : 8 A. T
FUSE-7 : 6 A. T
FUSE-8 : Max. 10 A. T

1- Connect the unit as shown in the appropriate diagram. Be sure to connect the battery supply the right way round. External fuse is recommended. Stranded cable cross section: 1,5mm², Solid cable cross section: 2,5mm², The stripping length is 7 to 9 mm. Supply cables must comply with the requirements of IEC 60277 or IEC 60245.

2- The CAN interface requires that a 120 Ohms terminator is fitted to each end of the communications link. This termination resistor is fitted internally into the unit. So it is not required externally. Screened cable must be used for connecting the CAN, ensuring that the screen is grounded at one end ONLY.

3- Screened cable must be used for connecting the Magnetic Pickup, ensuring that the screen is grounded at one end ONLY.

4- Current transformers secondary should be grounded. The CT of 5VA is recommended. The unit has a burden of 0.5VA on the CT.

3. Changing And Saving Parameters Values

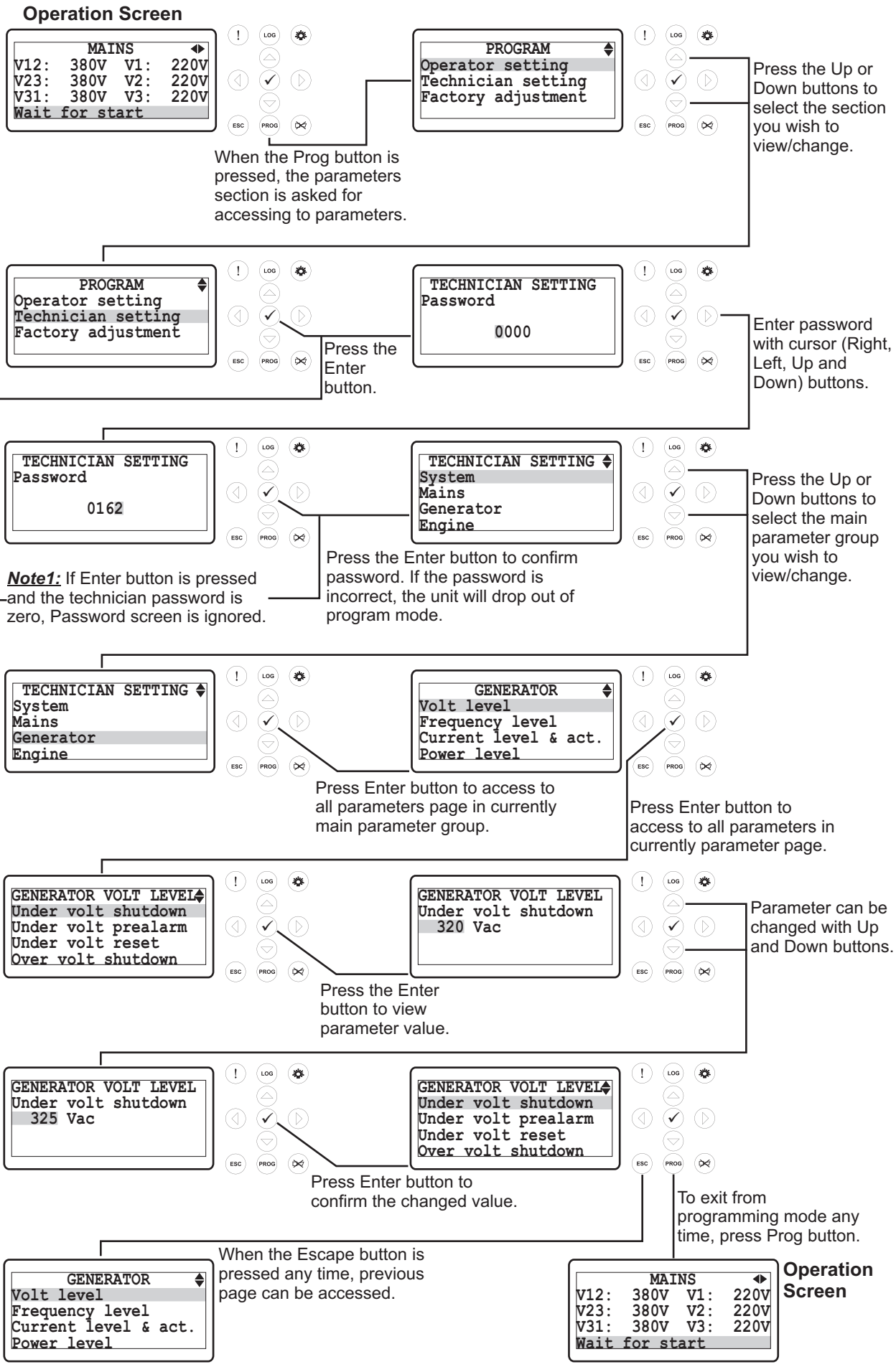

4. Parameters

4.1 Operator Parameters

4.1.1 Mains

MAINS VOLT LEVEL (*Mains->Volt level*)		Min	Max	Default	Unit
Under volt trip	Mains Under Voltage	60	600	320	V~
Under volt reset	Mains Under Voltage Reset	60	600	340	V~
Over volt trip	Mains Over Voltage	60	600	440	V~
Over volt reset	Mains Over Voltage Reset	60	600	420	V~

MAINS FREQ. LEVEL (*Mains->*Frequency *level*)		Min	Max	Default	Unit
Under freq trip	Mains Under Frequency	20.0	75.0	45.0	Hz
Under freq reset	Mains Under Frequency Reset	20.0	75.0	48.0	Hz
Over freq trip	Mains Over Frequency	20.0	75.0	55.0	Hz
Over freq reset	Mains Over Frequency Reset	20.0	75.0	52.0	Hz

4.1.2 Generator

GENERATOR VOLT LEVEL (*Generator->Volt level*)		Min	Max	Default	Unit
Under volt shutdown	Generator Under Voltage Shutdown	60(dis)	600	320	V~
Under volt prealarm	Generator Under Voltage Pre-Alarm	60(dis)	600	340	V~
Under volt reset	Generator Under Voltage Pre-Alarm Reset	60	600	350	V~
Over volt shutdown	Generator Over Voltage Shutdown	60	600	440	V~
Over volt prealarm	Generator Over Voltage Pre-Alarm	60(dis)	600	420	V~
Over volt reset	Generator Over Voltage Pre-Alarm Reset	60	600	400	V~
Shutdown delay time	Generator Voltage Shutdown Delay Time	0.0	10.0	1.0	Sec

GENERATOR FREQ LEVEL (*Generator->Frequency level*)		Min	Max	Default	Unit
Nominal frequency	Nominal Alternator Frequency	30.0	75.0	50.0	Hz
Under freq shutdown	Generator Under Frequency Shutdown	30.0(dis)	75.0	43.0	Hz
Under freq prealarm	Generator Under Frequency Pre-Alarm	30.0(dis)	75.0	45.0	Hz
Under freq reset	Generator Under Frequency Pre-Alarm Reset	30.0	75.0	46.0	Hz
Over freq shutdown	Generator Over Frequency Shutdown	30.0(dis)	75.0	58.0	Hz
Over freq prealarm	Generator Over Frequency Pre-Alarm	30.0(dis)	75.0	55.0	Hz
Over freq reset	Generator Over Frequency Pre-Alarm Reset	30.0	75.0	54.0	Hz
Shutdown delay time	Generator Frequency Shutdown Delay Time	0.0	10.0	1.0	Sec

GENERATOR CUR LEVEL (*Generator->Current level*)		Min	Max	Default	Unit
Under cur. set	Generator Under Current Set	0	9999	1	A~
Under cur. prealarm	Generator Under Current Pre-Alarm	0(dis)	9999	dis	A~
Under cur. reset	Generator Under Current Pre-Alarm Reset	0	9999	5	A~
Over cur. IDMT alarm	Generator Over Current IDMT Alarm	ENABL/DISBL		DISBL	
Over cur. set	Generator Over Current Set	0	9999	9999	A~
Over cur. prealarm	Generator Over Current Pre-Alarm	0(dis)	9999	9990	A~
Over cur. reset	Generator Over Current Pre-Alarm Reset	0	9999	9980	A~

Note: dis = disable

GEN POWER LEVEL (*Generator->Power level*)		Min	Max	Default	Unit
Under power set	Generator Under Power Set	0	9999	0	kVA
Under power prealarm	Generator Under Power Pre-Alarm	0(dis)	9999	dis	kVA
Under power reset	Generator Under Power Pre-Alarm Reset	0	9999	5	kVA
Over power IDMT alarm	Generator Over Power IDMT Alarm	ENABL/DISBL		DISBL	
Over power set	Generator Over Power Set	0	9999	0	kVA
Over power prealarm	Generator Over Power Pre-Alarm	0(dis)	9999	dis	kVA
Over power reset	Generator Over Power Pre-Alarm Reset	0	9999	0	kVA
Over load step 1	Generator Over Load Step 1	0	9999	9999	KVA
Over load step 1 rest	Generator Over Load Step 1 Reset	0	9999	9999	KVA
Over load step 2	Generator Over Load Step 2	0	9999	9999	KVA
Over load step 2 rest	Generator Over Load Step 2 Reset	0	9999	9999	KVA
Reverse power set	Reverse Power Set	-9999	0	0	kW

GEN WORKING CALENDAR (*Generator->Working calendar*)		Min	Max	Default	Unit
Disable/enable select	Working Calendar Disable or Enable	DISBL/ENABL		DISBL	
Start time on monday	Working Calendar Work Start Time on Monday	0.00	23.59	0.00	H.Min
Stop time on monday	Working Calendar Work Stop Time on Monday	0.00	23.59	23.59	H.Min
Start time on tues.	Working Calendar Work Start Time on Tuesday	0.00	23.59	0.00	H.Min
Stop time on tuesday	Working Calendar Work Stop Time on Tuesday	0.00	23.59	23.59	H.Min
Start time on wednes.	Working Calendar Work Start Time on Wednesday	0.00	23.59	0.00	H.Min
Stop time on wednes.	Working Calendar Work Stop Time on Wednesday	0.00	23.59	23.59	H.Min
Start time on thurs.	Working Calendar Work Start Time on Thursday	0.00	23.59	0.00	H.Min
Stop time on thursday	Working Calendar Work Stop Time on Thursday	0.00	23.59	23.59	H.Min
Start time on friday	Working Calendar Work Start Time on Friday	0.00	23.59	0.00	H.Min
Stop time on friday	Working Calendar Work Stop Time on Friday	0.00	23.59	23.59	H.Min
Start time on satur.	Working Calendar Work Start Time on Saturday	0.00	23.59	0.00	H.Min
Stop time on saturday	Working Calendar Work Stop Time on Saturday	0.00	23.59	23.59	H.Min
Start time on sunday	Working Calendar Work Start Time on Sunday	0.00	23.59	0.00	H.Min
Stop time on sunday	Working Calendar Work Stop Time on Sunday	0.00	23.59	23.59	H.Min

Note: dis = disable

4.2 Technician Parameters

4.2.1 System

SYSTEM NETWORK (*System->Network*)		Min	Max	Default	Unit
CT ratio	Current Transformer Ratio	1	9999	100	
Earth fault CT ratio	Earth Fault Current Transformer Ratio	1	9999	100	
Type of AC system	Select AC System; 0- 1 Phase 2 Wire 1- 3 Phase 4 Wire 2- 2 Phase 3 Wire L1-L2 3- 2 Phase 3 Wire L1-L3	0	3	1	
Phase sequence	Generator Phase Sequence (dis, L123 or L321)	DISBL, L123, L321		DISBL	
Generator kVA rating	Generator kVA Rating Set	0	9999	300	kVA
Power unit	Power Unit	kVA/kW		kVA	
kVA,kW,kVAr point	kVA, kW, kVAr Point Position; 0-> 0 1-> 0.0 2-> 0.00 3-> 0.000	0	3	0	
CT location	Current Transformer Location; 0-> Generator 1-> Load	0	1	0	
Power on mode	Power On Mode Selection	0-LAST MODE 1-AUTO MODE 2-TEST MODE 3-MANUAL MODE 4-STOP MODE		0-LAST MODE	
Nominal Cos Phi	Nominal Cos Phi	0.70	1.00	0.80	
PT primary	Voltage Transformer Primary	50	65000	400	V~
PT secondary	Voltage Transformer Secondary	50	480	400	V~

BREAKERS (*System->Breakers*)		Min	Max	Default	Unit
Type of Breaker	Hardware Breaker Selection	0	2	0	
Gen.brk.cls.contact	Gen Close Breaker Contact Type	NO / NC		0	
Gen.brk.cls.relay	Gen Close Breaker Relay Type	NOR / PULS		0	
Gen.brk.cls.time	Gen Close Timer	1	250	5	Sec
Gen.brk.open relay	Gen Open Breaker Relay Type	NOR / PULS		0	
Gen.brk.open time	Gen Open Timer	1	250	5	Sec
Mains.brk.cls.contact	Mains Close Breaker Contact Type	NO / NC		0	
Mains.brk.cls.relay	Mains Close Breaker Relay Type	NOR / PULS		0	
Mains.brk.cls.time	Mains Close Timer	1	250	5	Sec
Mains.brk.open relay	Mains Open Breaker Relay Type	NOR / PULS		0	
Mains.brk.open time	Mains Open Timer	1	250	5	Sec
Break.close puls.time	Breaker Close Pulse Time	0.0	10.0	0.5	Sec
Break.open pulse time	Breaker Open Pulse Time	0.0	10.0	0.5	Sec
Transfer time	Transfer Time	0	250	2	Sec
Spring loading time	Spring Loading Time	1	250	3	Sec
Retry number	Retry Number	1	250	5	

Note:

NO / NC : Normally Open / Normally Close
NOR / PULS : Normal / Pulse
dis = disable

LCD DISPLAY (*System->LCD display*)		Min	Max	Default	Unit
Language	Language Selection	ENGLISH/CHINESE		ENGLISH	
Contrast	Contrast Setting	4	9	5	
Auto backlight off	Auto Backlight Off 0-DISABLE 1-ENABLE 2-ENABLE(only when engine is not running)	0	2	0	
Auto scroll time	Auto Scroll Time	0 (dis)	250	0	Sec
Auto scroll number	Auto Scroll Number	1	24	5	
Err. mesg scroll time	Scroll Time For Error Messages	1	250	2	Sec
Back to genset screen	Back To Genset Screen	0 (dis)	250	0 (dis)	Sec

COMMUNICATION (*System->Communication*)		Min	Max	Default	Unit
Slave address	Slave Address	1	247	1	
Baud rate	Baud Rate: 0 - 1200 baud 1 - 2400 baud 2 - 4800 baud 3 - 9600 baud 4 - 19200 baud 5 - 38400 baud	0	5	3	
Parity	Parity: 0-> None, 1-> Odd, 2-> Even	0	2	0	
Stop bit	Stop Bit (0-> 1 stop bit,1-> 2 stop bit)	0	1	0	
Datalog period	Datalog Period	0.0(dis)	999.9	1.0	Min
Datalog activation	Datalog Activation: 0-Always active 1-Only active when engine is running	0	1	1	
Timeout	Timeout	0(dis)	999	3	Min
ASCII/RTU selection	ModBus ASCII/RTU Selection	ASCII / RTU		ASCII	

DATE & TIME SET (*System->Date & time set*)		Min	Max	Default	Unit
Year	Year	0	99		
Month	Month	1	12		
Day	Date	1	31		
Week	Day of week	1	7		
Hour	Hour	0	23		
Minute	Minute	0	59		
Second	Second	0	59		

DEFAULT SETTINGS (*System->Default settings*)		Min	Max	Default	Unit
Save setting to def.	Save setting to default	YES / NO		NO	
Reset default sets	Reset default sets	YES / NO		NO	
Reset factory sets	Reset factory sets	YES / NO		NO	

PASSWORD SETTINGS (*System->Password settings*)		Min	Max	Default	Unit
Operator password	Operator Password	0	9999	0	
Technician password	Technician Password	0	9999	0	

Note: dis = disable

4.2.2 Mains

MAINS VOLT LEVEL (*Mains->Volt level*)		Min	Max	Default	Unit
Under volt trip	Mains Under Voltage	60	600	320	V~
Under volt reset	Mains Under Voltage Reset	60	600	340	V~
Over volt trip	Mains Over Voltage	60	600	440	V~
Over volt reset	Mains Over Voltage Reset	60	600	420	V~

MAINS FREQ. LEVEL (*Mains->*Frequency *level*)		Min	Max	Default	Unit
Under freq trip	Mains Under Frequency	20.0	75.0	45.0	Hz
Under freq reset	Mains Under Frequency Reset	20.0	75.0	48.0	Hz
Over freq trip	Mains Over Frequency	20.0	75.0	55.0	Hz
Over freq reset	Mains Over Frequency Reset	20.0	75.0	52.0	Hz

MAINS ACTIONS (*Mains->*Actions)		Min	Max	Default	Unit
Mains failure detect	Mains Failure Detection: 0-DISABLE 1-ENABLE 2-ENABLE ON REMOTE	0	2	1	
Mains fail.stop mode	Look Mains Failure at Stop Mode En/Dis	ENABL/DISBL		ENABL	
Always return delay	Always Look Mains Return Delay	ENABL/DISBL		DISBL	
Immediate MCB open	Immediate MCB Open	ENABL/DISBL		ENABL	

4.2.3 Generator

GENERATOR VOLT LEVEL (*Generator->Volt level*)		Min	Max	Default	Unit
Under volt shutdown	Generator Under Voltage Shutdown	60(dis)	600	320	V~
Under volt prealarm	Generator Under Voltage Pre-Alarm	60(dis)	600	340	V~
Under volt reset	Generator Under Voltage Pre-Alarm Reset	60	600	350	V~
Over volt shutdown	Generator Over Voltage Shutdown	60	600	440	V~
Over volt prealarm	Generator Over Voltage Pre-Alarm	60(dis)	600	420	V~
Over volt reset	Generator Over Voltage Pre-Alarm Reset	60	600	400	V~
Shutdown delay time	Generator Voltage Shutdown Delay Time	0.0	10.0	1.0	Sec

GENERATOR FREQ LEVEL (*Generator->Frequency level*)		Min	Max	Default	Unit
Nominal frequency	Nominal Alternator Frequency	30.0	75.0	50.0	Hz
Under freq shutdown	Generator Under Frequency Shutdown	30.0(dis)	75.0	43.0	Hz
Under freq prealarm	Generator Under Frequency Pre-Alarm	30.0(dis)	75.0	45.0	Hz
Under freq reset	Generator Under Frequency Pre-Alarm Reset	30.0	75.0	46.0	Hz
Over freq shutdown	Generator Over Frequency Shutdown	30.0(dis)	75.0	58.0	Hz
Over freq prealarm	Generator Over Frequency Pre-Alarm	30.0(dis)	75.0	55.0	Hz
Over freq reset	Generator Over Frequency Pre-Alarm Reset	30.0	75.0	54.0	Hz
Shutdown delay time	Generator Frequency Shutdown Delay Time	0.0	10.0	1.0	Sec

Note: dis = disable

GEN CUR LEVEL & ACT (*Generator->Current level & act.*)		Min	Max	Default	Unit
Under cur. set	Generator Under Current Set	0	9999	1	A~
Under cur. prealarm	Generator Under Current Pre-Alarm	0(dis)	9999	dis	A~
Under cur. reset	Generator Under Current Pre-Alarm Reset	0	9999	5	A~
Under cur. act.	Generator Under Current Actions 0 - Disable 1 - Warning (Alarm Only, No Shutdown) 2 - Electrical Trip (Alarm/Off Load Generator Followed By Shutdown After Cooling) 3 - Shutdown (Alarm And Shutdown)	0(dis)	3	dis	
Under act. delay time	Generator Under Current Actions Delay Time	0	99	2	Sec
Over cur. IDMT alarm	Generator Over Current IDMT Alarm	ENABL/DISBL		DISBL	
Over cur. set	Generator Over Current Set	0	9999	9999	A~
Over cur. prealarm	Generator Over Current Pre-Alarm	0(dis)	9999	9990	A~
Over cur. reset	Generator Over Current Pre-Alarm Reset	0	9999	9980	A~
Over cur. act.	Generator Over Current Actions 0 - Disable 1 - Warning (Alarm Only, No Shutdown) 2 - Electrical Trip (Alarm/Off Load Generator Followed By Shutdown After Cooling) 3 - Shutdown (Alarm And Shutdown)	0(dis)	3	dis	
Over act. delay time	Generator Over Current Actions Delay Time	0	99	2	Sec
Short circuit cur.	Generator Short Circuit Current Set	0	9999	9999	A~
Earth fault cur.	Generator Earth Fault Current Set	0	9999	100	A~
Earth fault cur. act.	Generator Earth Fault Current Actions 0 - Disable 1 - Warning (Alarm Only, No Shutdown) 2 - Electrical Trip (Alarm/Off Load Generator Followed By Shutdown After Cooling) 3 - Shutdown (Alarm And Shutdown)	0(dis)	3	dis	
E.F. act. delay time	Generator Earth Fault Current Actions Delay Time	0	99	2	Sec
Unbalance load set	Unbalance Load Set	0	9999	0	A~
Unbalance load act.	Unbalance Load Actions 0 - Disable 1 - Warning (Alarm Only, No Shutdown) 2 - Electrical Trip (Alarm/Off Load Generator Followed By Shutdown After Cooling) 3 - Shutdown (Alarm And Shutdown)	0(dis)	3	dis	
Unbalance act. delay	Unbalance Load Actions Delay Time	0	99	2	Sec

Note: dis = disable

GEN POWER LEVEL (*Generator->Power level*)		Min	Max	Default	Unit
Under power set	Generator Under Power Set	0	9999	0	kVA
Under power prealarm	Generator Under Power Pre-Alarm	0(dis)	9999	dis	kVA
Under power reset	Generator Under Power Pre-Alarm Reset	0	9999	5	kVA
Under power act.	Generator Under Power Actions 0 - Disable 1 - Warning (Alarm Only, No Shutdown) 2 - Electrical Trip (Alarm/Off Load Generator Followed By Shutdown After Cooling) 3 - Shutdown (Alarm And Shutdown)	0(dis)	3	0(dis)	
Under act. delay time	Generator Under Power Action Delay Time	0	99	2	Sec
Over power IDMT alarm	Generator Over Power IDMT Alarm	ENABL/DISBL		DISBL	
Over power set	Generator Over Power Set	0	9999	0	kVA
Over power prealarm	Generator Over Power Pre-Alarm	0(dis)	9999	dis	kVA
Over power reset	Generator Over Power Pre-Alarm Reset	0	9999	0	kVA
Over power act.	Generator Over Power Actions 0 - Disable 1 - Warning (Alarm Only, No Shutdown) 2 - Electrical Trip (Alarm/Off Load Generator Followed By Shutdown After Cooling) 3 - Shutdown (Alarm And Shutdown)	0(dis)	3	0(dis)	
Over act. delay time	Generator Over Power Action Delay Time	0	99	2	Sec
Over load step 1	Generator Over Load Step 1	0	9999	9999	KVA
Over load step 1 rest	Generator Over Load Step 1 Reset	0	9999	9999	KVA
Over load step 1 act.	Generator Over Load Step 1 Actions 0 - Disable 1 - Status 2 - Warning Non-Latching 3 - Warning Latching	0(dis)	3	0(dis)	
Over load step 1 dly.	Generator Over Load Step 1 Action Delay Time	0	999.9	30.0	Sec
Over load step 2	Generator Over Load Step 2	0	9999	9999	KVA
Over load step 2 rest	Generator Over Load Step 2 Reset	0	9999	9999	KVA
Over load step 2 act.	Generator Over Load Step 2 Actions 0 - Disable 1 - Status 2 - Warning Non-Latching 3 - Warning Latching	0(dis)	3	0(dis)	
Over load step 2 dly.	Generator Over Load Step 2 Action Delay Time	0	999.9	30.0	Sec
Reverse power set	Reverse Power Set	-9999	0	0	kW
Reverse power act.	Reverse Power Actions 0 - Disable 1 - Warning (Alarm Only, No Shutdown) 2 - Electrical Trip (Alarm/Off Load Generator Followed By Shutdown After Cooling) 3 - Shutdown (Alarm And Shutdown)	0(dis)	3	0(dis)	
Rv.pow.act.delay time	Reverse Power Action Delay Time	0	99	2	Sec

Note: dis = disable

GEN WORKING CALENDAR (*Generator->Working calendar*)		Min	Max	Default	Unit
Disable/enable select	Working Calendar Disable or Enable	DISBL/ENABL		DISBL	
Start time on monday	Working Calendar Work Start Time on Monday	0.00	23.59	0.00	H.Min
Stop time on monday	Working Calendar Work Stop Time on Monday	0.00	23.59	23.59	H.Min
Start time on tues.	Working Calendar Work Start Time on Tuesday	0.00	23.59	0.00	H.Min
Stop time on tuesday	Working Calendar Work Stop Time on Tuesday	0.00	23.59	23.59	H.Min
Start time on wednes.	Working Calendar Work Start Time on Wednesday	0.00	23.59	0.00	H.Min
Stop time on wednes.	Working Calendar Work Stop Time on Wednesday	0.00	23.59	23.59	H.Min
Start time on thurs.	Working Calendar Work Start Time on Thursday	0.00	23.59	0.00	H.Min
Stop time on thursday	Working Calendar Work Stop Time on Thursday	0.00	23.59	23.59	H.Min
Start time on friday	Working Calendar Work Start Time on Friday	0.00	23.59	0.00	H.Min
Stop time on friday	Working Calendar Work Stop Time on Friday	0.00	23.59	23.59	H.Min
Start time on satur.	Working Calendar Work Start Time on Saturday	0.00	23.59	0.00	H.Min
Stop time on saturday	Working Calendar Work Stop Time on Saturday	0.00	23.59	23.59	H.Min
Start time on sunday	Working Calendar Work Start Time on Sunday	0.00	23.59	0.00	H.Min
Stop time on sunday	Working Calendar Work Stop Time on Sunday	0.00	23.59	23.59	H.Min

GENERATOR GENERAL (*Generator->General*)		Min	Max	Default	Unit
Sens.option gen.freq	Sensing Options Generator Frq En/Dis	ENABL/DISBL		ENABL	
Sens.opt.pickup&flywh	Sensing Opt Pickup En/Dis & Flywheel	0(dis)	1000	DISBL	
All warning are latch	All Warnings Are Latched En/Dis	ENABL/DISBL		DISBL	
Stop mode on shutdown	Changed To Stop Mode On Shutdown Fail	ENABL/DISBL		DISBL	

4.2.4 Engine

ENGINE START OPTIONS (*Engine->Starting options*)		Min	Max	Default	Unit
Horn prior start	Audible Alarm Prior To Starting En/Dis	ENABL/DISBL		DISBL	
No. of crank attemp	Number Of Start Attempts	1	10	3	
Cranking time	Cranking Time	1	99	5	Sec
Crank rest time	Crank Rest Time	5	99	10	Sec
Pickup fail dely	Pickup Sensor Fail Delay	0.1	10.0	1.0	Sec

ENG. CRANK DISCONNECT (*Engine->Crank disconnect*)		Min	Max	Default	Unit
Generator frequency	Crank Disconnect On Gen. Frequency	10.0	75.0	30.0	Hz
Engine speed	Crank Disconnect On Engine RPM	100	6000	500	RPM
Generator volt	Crank Disconnect On Gen. Voltage	60 (dis)	600	300	V~
Charge alt. volt	Crank Disconnect On Charge Alt. Voltage	6.0 (dis)	30.0	dis	V⎓
Oil pres. enab./dis.	Crank Disconnect On Oil Pressure En/Dis	ENABL/DISBL		DISBL	
Oil pressure value	Crank Disconnect On Oil Pressure Value	1.0	30.0	1.0	BAR
Check oil befor.start	Check Oil Pressure Before Start	ENABL/DISBL		ENABL	

ENGINE SPEED SETS (*Engine->Speed settings*)		Min	Max	Default	Unit
Nominal speed	Nominal Speed	500	5000	1500	RPM
Under speed shutdown	Engine Under Speed Shutdown	500(dis)	5000	dis	RPM
Under speed prealarm	Engine Under Speed Prealarm	500(dis)	5000	dis	RPM
Under speed reset	Engine Under Speed Prealarm Reset	500	5000	500	RPM
Over speed shutdown	Engine Over Speed Shutdown	500(dis)	5000	dis	RPM
Over speed prealarm	Engine Over Speed Prealarm	500(dis)	5000	dis	RPM
Over speed reset	Engine Over Speed Prealarm Reset	500	5000	500	RPM
Shutdown delay time	Engine Speed Shutdown Delay Time	0.0	10.0	1.0	Sec

Note: dis = disable

ENGINE PLANT BATTERY (*Engine->Plant battery*)		Min	Max	Default	Unit
Under volt shutdown	Battery Undervolts Shutdown	6.0(dis)	30.0	dis	V⎓
Under volt warning	Battery Undervolts Warning	6.0(dis)	30.0	11.0	V⎓
Under volt reset	Battery Undervolts Warning Reset	6.0	30.0	11.5	V⎓
Under volt delay	Battery Undervolts Volts Delay	0.0	120.0	1.0	Sec
Over volt shutdown	Battery Overvolts Shutdown	6.0(dis)	30.0	dis	V⎓
Over volt warning	Battery Overvolts Warning	6.0(dis)	30.0	29.0	V⎓
Over volt reset	Battery Overvolts Warning Reset	6.0	30.0	28.5	V⎓
Over volt delay	Battery Overvolts Delay	0.0	120.0	1.0	Sec
Alt. chg. warning	Charge Alternator Warning	6.0(dis)	30.0	dis	V⎓

Note: dis = disable

CANBUS ECU (*Engine->CanBus ECU*)		Min	Max	Default	Unit
Baud rate	Baud Rate: 0: 20, 1: 50, 2: 100, 3: 125, 4: 250, 5: 500, 6: 800, 7: 1.000	0	7	4	kBaud
J1939 ECU type	J1939 ECU Type Selection: 0 - Disable 1 - Standard 2 - Volvo EMS1 3 - Volvo EMS2 4 - Volvo EMS2b 5 - Volvo EDC3 6 - Volvo EDC4 7 - Deutz EMR2 8 - Deutz EMR3 9 - Perkins 1300 10 - Perkins ADEM3 11 - Perkins ADEM4 12 - Scania S6 Single Speed 13 - MAN MFR 14 - Cummins ISB 15 - Cummins CM570 16 - Cummins CM850 17 - Cummins CM2150E 18 - Cummins CM2250 19 - Detroit DDEC 20 - John Deere 21 - MTU ADEC 22 - MTU ECU8 23 - MTU ECU8 SAM 24 - Yuchai 25 - Reserved 26 - Baudouin WISE10B 27 - Baudouin WISE15 28 - Perkins 1600 29 - Perkins A4E2 30 - Perkins A5E2 31 - Perkins A5E2v2 32 - Cummins CM2880 33 - Cummins DCEC QSZ13 34 - Doosan DP222CC 35 - FPT EDC17CV41 36 - FPT EDC7UC31 37 - FPT MD1CE101 38 - FPT NEF67TE8P-S550 39 - Hatz EDC17 40 - Hyundai DC03-OOG00 41 - Hyundai DP222CB 42 - Iveco NEF&CURSOR 43 - Scania S10 Single Speed 44 - Volvo EMS2.2 45 - Volvo EMS2.3 46 - Volvo EMS2.4	0(dis)	46	0	
Device address	Device Address	0	255	17	
SPN version	SPN version	1	3	1	
ECU remote control	ECU Remote Control via J1939	ENABL/DISBL		ENABL	
Speed control enable	Speed Control via J1939	ENABL/DISBL		ENABL	
Oil pres cont. enab	Oil Pressure Control via J1939	ENABL/DISBL		ENABL	
Temp. control enable	Coolant Temperature Control via J1939	ENABL/DISBL		ENABL	
Speed set point	Speed Set Point Selection	1500 / 1800		1500	RPM
Speed correction	Speed Correction Value	0	100	50	%

Note: Changing above mentioned parameter becomes only effective after restarting the unit.

J1939 SPN mask-1	J1939 SPN Mask-1	0(dis)	65535	0(dis)	
J1939 FMI mask-1	J1939 FMI Mask-1	0	255	9	
J1939 SPN mask-2	J1939 SPN Mask-2	0(dis)	65535	0(dis)	
J1939 FMI mask-2	J1939 FMI Mask-2	0	255	9	
J1939 SPN mask-3	J1939 SPN Mask-3	0(dis)	65535	0(dis)	
J1939 FMI mask-3	J1939 FMI Mask-3	0	255	9	
J1939 SPN mask-4	J1939 SPN Mask-4	0(dis)	65535	0(dis)	
J1939 FMI mask-4	J1939 FMI Mask-4	0	255	9	
J1939 SPN mask-5	J1939 SPN Mask-5	0(dis)	65535	0(dis)	
J1939 FMI mask-5	J1939 FMI Mask-5	0	255	9	

CANBUS ERROR SET (*Engine->CanBus error set*)		**Min**	**Max**	**Default**	**Unit**
CAN fault actions	Can Fault Actions: 0- Disable 1- Warning Non-Latching 2- Warning (Alarm Only, No Shutdown) 3- Electrical Trip (Alarm/Off Load Generator Followed By Shutdown After Cooling) 4- Shutdown (Alarm And Shutdown)	0(dis)	4	0	
CAN fault activation	Can Fault Activation: 0- Active From Starting 1- Active From Safety On 2- Always Active	0	2	0	
CAN fault delay	Can Fault Delay	2	250	10	Sec
Amber warn.actions	J1939 Amber Warning Lamp Actions: 0- Disable 1- Warning Non-Latching 2- Warning (Alarm Only, No Shutdown) 3- Electrical Trip (Alarm/Off Load Generator Followed By Shutdown After Cooling) 4- Shutdown (Alarm And Shutdown)	0(dis)	4	0	
Amber warn.activation	J1939 Amber Warning Lamp Activation: 0- Active From Starting 1- Active From Safety On 2- Always Active	0	2	2	
Amber warn.delay	J1939 Amber Warning Lamp Delay	0	250	2	Sec
Red stop actions	J1939 Red Stop Lamp Actions: 0- Disable 1- Warning Non-Latching 2- Warning (Alarm Only, No Shutdown) 3- Electrical Trip (Alarm/Off Load Generator Followed By Shutdown After Cooling) 4- Shutdown (Alarm And Shutdown)	0(dis)	4	0	
Red stop activation	J1939 Red Stop Lamp Activation: 0- Active From Starting 1- Active From Safety On 2- Always Active	0	2	2	
Red stop delay	J1939 Red Stop Lamp Delay	0	250	2	Sec

Note: dis = disable

ENGINE MAINTENANCE (*Engine->Maintenance*)		Min	Max	Default	Unit
Running hour interval	Running Hours Interval	0(dis)	9999	600	Hour
Maint. date interval	Maintenance Date Interval	0(dis)	12	6	Month
Eng. stop when maint	Engine Stop When Maintenance	ENABL/DISBL		DISBL	
Engine running hour	Engine Running Hour	0	30000	0	
Maintenance okay	Maintenance Okay	YES/NO		NO	
Maint.Ok Oper. author	Maintenance Okay Operator Authorization	ENABL/DISBL		DISBL	

LOAD TEST (*Engine->Load test*)		Min	Max	Default	Unit
Disable/enable select	Disable, No Load or On Load Selection	0-DISABLE 1-NO LOAD 2-ON LOAD		1-NO LOAD	

EXERCISE (*Engine->Exercise*)		Min	Max	Default	Unit
Disable/enable select	Exercise Disable or Enable	DISBL/ENABL		DISBL	
Start time1 on monday	Exercise Start Time 1 on Monday	0.00	23.59	0.00	H.Min
Stop time1 on monday	Exercise Stop Time 1 on Monday	0.00	23.59	0.00	H.Min
Start time2 on monday	Exercise Start Time 2 on Monday	0.00	23.59	0.00	H.Min
Stop time2 on monday	Exercise Stop Time 2 on Monday	0.00	23.59	0.00	H.Min
Start time3 on monday	Exercise Start Time 3 on Monday	0.00	23.59	0.00	H.Min
Stop time3 on monday	Exercise Stop Time 3 on Monday	0.00	23.59	0.00	H.Min
Start time4 on monday	Exercise Start Time 4 on Monday	0.00	23.59	0.00	H.Min
Stop time4 on monday	Exercise Stop Time 4 on Monday	0.00	23.59	0.00	H.Min
Start time1 on tues.	Exercise Start Time 1 on Tuesday	0.00	23.59	0.00	H.Min
Stop time1 on tuesday	Exercise Stop Time 1 on Tuesday	0.00	23.59	0.00	H.Min
Start time2 on tues.	Exercise Start Time 2 on Tuesday	0.00	23.59	0.00	H.Min
Stop time2 on Tuesday	Exercise Stop Time 2 on Tuesday	0.00	23.59	0.00	H.Min
Start time3 on tues.	Exercise Start Time 3 on Tuesday	0.00	23.59	0.00	H.Min
Stop time3 on tuesday	Exercise Stop Time 3 on Tuesday	0.00	23.59	0.00	H.Min
Start time4 on tues.	Exercise Start Time 4 on Tuesday	0.00	23.59	0.00	H.Min
Stop time4 on tuesday	Exercise Stop Time 4 on Tuesday	0.00	23.59	0.00	H.Min
Start time1 on wednes.	Exercise Start Time 1 on Wednesday	0.00	23.59	0.00	H.Min
Stop time1 on wednes.	Exercise Stop Time 1 on Wednesday	0.00	23.59	0.00	H.Min
Start time2 on wednes.	Exercise Start Time 2 on Wednesday	0.00	23.59	0.00	H.Min
Stop time2 on wednes.	Exercise Stop Time 2 on Wednesday	0.00	23.59	0.00	H.Min
Start time3 on wednes.	Exercise Start Time 3 on Wednesday	0.00	23.59	0.00	H.Min
Stop time3 on wednes.	Exercise Stop Time 3 on Wednesday	0.00	23.59	0.00	H.Min
Start time4 on wednes.	Exercise Start Time 4 on Wednesday	0.00	23.59	0.00	H.Min
Stop time4 on wednes.	Exercise Stop Time 4 on Wednesday	0.00	23.59	0.00	H.Min
Start time1 on thurs.	Exercise Start Time 1 on Thursday	0.00	23.59	0.00	H.Min
Stop time1 on thurs.	Exercise Stop Time 1 on Thursday	0.00	23.59	0.00	H.Min
Start time2 on thurs.	Exercise Start Time 2 on Thursday	0.00	23.59	0.00	H.Min
Stop time2 on thurs.	Exercise Stop Time 2 on Thursday	0.00	23.59	0.00	H.Min
Start time3 on thurs.	Exercise Start Time 3 on Thursday	0.00	23.59	0.00	H.Min
Stop time3 on thurs.	Exercise Stop Time 3 on Thursday	0.00	23.59	0.00	H.Min
Start time4 on thurs.	Exercise Start Time 4 on Thursday	0.00	23.59	0.00	H.Min
Stop time4 on thurs.	Exercise Stop Time 4 on Thursday	0.00	23.59	0.00	H.Min

Note: dis = disable

Start time1 on friday	Exercise Start Time 1 on Friday	0.00	23.59	0.00	H.Min
Stop time1 on friday	Exercise Stop Time 1 on Friday	0.00	23.59	0.00	H.Min
Start time2 on friday	Exercise Start Time 2 on Friday	0.00	23.59	0.00	H.Min
Stop time2 on friday	Exercise Stop Time 2 on Friday	0.00	23.59	0.00	H.Min
Start time3 on friday	Exercise Start Time 3 on Friday	0.00	23.59	0.00	H.Min
Stop time3 on friday	Exercise Stop Time 3 on Friday	0.00	23.59	0.00	H.Min
Start time4 on friday	Exercise Start Time 4 on Friday	0.00	23.59	0.00	H.Min
Stop time4 on friday	Exercise Stop Time 4 on Friday	0.00	23.59	0.00	H.Min
Start time1 on satur.	Exercise Start Time 1 on Saturday	0.00	23.59	0.00	H.Min
Stop time1 on satur.	Exercise Stop Time 1 on Saturday	0.00	23.59	0.00	H.Min
Start time2 on satur.	Exercise Start Time 2 on Saturday	0.00	23.59	0.00	H.Min
Stop time2 on satur.	Exercise Stop Time 2 on Saturday	0.00	23.59	0.00	H.Min
Start time3 on satur.	Exercise Start Time 3 on Saturday	0.00	23.59	0.00	H.Min
Stop time3 on satur.	Exercise Stop Time 3 on Saturday	0.00	23.59	0.00	H.Min
Start time4 on satur.	Exercise Start Time 4 on Saturday	0.00	23.59	0.00	H.Min
Stop time4 on satur.	Exercise Stop Time 4 on Saturday	0.00	23.59	0.00	H.Min
Start time1 on sunday	Exercise Start Time 1 on Sunday	0.00	23.59	0.00	H.Min
Stop time1 on sunday	Exercise Stop Time 1 on Sunday	0.00	23.59	0.00	H.Min
Start time2 on sunday	Exercise Start Time 2 on Sunday	0.00	23.59	0.00	H.Min
Stop time2 on sunday	Exercise Stop Time 2 on Sunday	0.00	23.59	0.00	H.Min
Start time3 on sunday	Exercise Start Time 3 on Sunday	0.00	23.59	0.00	H.Min
Stop time3 on sunday	Exercise Stop Time 3 on Sunday	0.00	23.59	0.00	H.Min
Start time4 on sunday	Exercise Start Time 4 on Sunday	0.00	23.59	0.00	H.Min
Stop time4 on sunday	Exercise Stop Time 4 on Sunday	0.00	23.59	0.00	H.Min

ENGINE GENERAL (*Engine->General*)		**Min**	**Max**	**Default**	**Unit**
Fuel selection	Engine Fuel Selection	0-GAS 1-DIESEL 2-GASOLINE		1-DIESEL	
Stop solenoid time	Stop Solenoid Time	1	99	20	Sec
Ignition delay	Ignition Delay	1	99	5	Sec
Gas valve delay	Gas Valve Delay	1	99	5	Sec
Min. of ignition speed	Minimum Ignition Speed	10	1500	200	RPM
Choke time	Choke Time	0.0	30.0	0.8	Sec

Note: dis = disable

4.2.5 Inputs

SENDER INPUTS (*Inputs->Sender inputs*)		Min	Max	Default	Unit
Oil pressure unit	Oil Pressure Unit	BAR/PSI/KPA		BAR	
Oil press. input type	Oil Pressure Input Type	0 - Not Used (Disable) 1 - Digital NC 2 - Digital NO 3 - VDO 5 BAR 4 - VDO 7 BAR 5 - VDO 10 BAR 6 - DATCON 5 BAR 7 - DATCON 7 BAR 8 - MURPHY 7 BAR 9 - User Configured		0 (dis)	
Oil pressure prealarm	Oil Pressure Pre-Alarm	0.0 (dis)	30.0	1.2	BAR
Oil pressure reset	Oil Pressure Pre-Alarm Reset	0.0	30.0	1.4	BAR
Oil pressure shutdown	Oil Pressure Shutdown	0.0	30.0	1.0	BAR
Press.sensor err.shut	Oil Pressure Sensor Error Shutdown	DISBL/ENABL		ENABL	
Temperature unit	Coolant Temperature Unit	ºC/ºF		ºC	
Temp. input type	Coolant Temperature Input Type	0 - Not Used (Disable) 1 - Digital NC 2 - Digital NO 3 - VDO 120 ºC 4 - VDO 150 ºC 5 - DATCON 6 - MURPHY 7 - PT100 8 - User Configured		0 (dis)	
Temp. sensor break	Temperature Sensor Break	0 - Disable 1 - Enable From Safety On (3min. delayed) 2 - Always Enable		0 (dis)	
High temp. prealarm	High Temperature Pre-Alarm	0 (dis)	300	90	℃
High temp. reset	High Temp. Pre-Alarm Reset	0	300	88	℃
High temp. shutdown	High Temperature Shutdown	0	300	95	℃
Low temp. warning	Low Temperature Warning	0 (dis)	70	0 (dis)	℃
Heater control ON	Coolant Heater Control On	0 (dis)	300	0 (dis)	℃
Heater control OFF	Coolant Heater Control Off	0	300	45	℃
Water pump on time	Water Pump On Time	0	9999	5	Sec
Water pump off time	Water Pump Off Time	0	9999	5	Sec
Temp. sensor err.shut	Temperature Sensor Error Shutdown	DISBL/ENABL		ENABL	
Conf. AI1 unit	Configurable Analog Input-1 Unit	BAR/PSI/KPA/ºC/ºF/%/Lt		%	
Conf. AI1 type	Configurable Analog Input-1 Type	0- Not Used (Disable) 1- Digital NC 2- Digital NO 3- VDO OHM (10-180) 4- VDO TUBE (90-0) 5- US OHM (240-33) 6- ELS11 OHM (0-190) 7- FORD (73-10) 8- ELS13 OHM (0-190) 9- ELS30 OHM (0-190) 10- DAVITEQ (RS485)*1 11- KUS CLS2 (RS485)*1 12- MSLL 790 (RS485)*1 13- CSFL 790 (RS485)*1 14- User Configured		0 (dis)	

Note*1: These sensor types can only be used in the Trans-AMF.RS485 units.

Conf. AI1 indication	If Conf. AI1 type is "Digital" 0- Status 1- Warning Non-Latching 2- Warning Latching 3- Electrical Trip 4- Shutdown	0	4	0	
Conf. AI1 activation	If Conf. AI1 type is "Digital" 0- Active From Starting 1- Active From Safety On 2- Always Active	0	2	2	
Conf. AI1 active dely	Configurable Analog Input-1 Active Delay (If Conf. AI1 type is "Digital")	0	250	0	Sec
Conf. AI1 low prealrm	Config. Analog Input-1 Low Pre-Alarm	0 (dis)	3000	0 (dis)	%
Conf. AI1 low reset	Config. Analog Input-1 Low Reset	0	3000	60	%
Conf. AI1 low shutdwn	Config. Analog Input-1 Low Shutdown	0 (dis)	3000	0 (dis)	%
Conf. AI1 high prealr	Config. Analog Input-1 High Pre-Alarm	0 (dis)	3000	0 (dis)	%
Conf. AI1 high reset	Config. Analog Input-1 High Reset	0	3000	90	%
Conf. AI1 high shutd.	Config. Analog Input-1 High Shutdown	0 (dis)	3000	0 (dis)	%
Conf. AI1 control ON	Config. Analog Input-1 control ON	0 (dis)	3000	0 (dis)	%
Conf. AI1 control OFF	Config. Analog Input-1 control OFF	0	3000	75	%
Fuel filling max.time	Fuel Filling Maximum Time	0 (dis)	30000	0 (dis)	Sec
Fuel fill.alarm reset	Fuel Filling Alarm Reset	YES/NO		NO	
Fuel consumpt. reset	Fuel Consumption Reset	YES/NO		NO	
Fuel tank capacity	Fuel Tank Capacity	0	30000	100	Lt
Leak fuel alarm	Leak Fuel Alarm Set	0 (dis)	100	0 (dis)	%
Cnf.AI1 sens err.shut	Conf. AI1 Sensor Error Shutdown	DISBL/ENABL		ENABL	
Conf. AI2 unit	Configurable Analog Input-2 Unit	BAR/PSI/KPA/ºC/ºF/%/Lt		ºC	
Conf. AI2 type	Configurable Analog Input-2 Type	0 - Not Used (Disable) 1 - Digital NC 2 - Digital NO 3 - VDO 120 ºC 4 - VDO 150 ºC 5 - DATCON 6 - MURPHY 7 - PT100 8 - User Configured		0 (dis)	
Conf. AI2 indication	If Conf. AI2 type is "Digital" 0- Status 1- Warning Non-Latching 2- Warning Latching 3- Electrical Trip 4- Shutdown	0	4	0	
Conf. AI2 activation	If Conf. AI2 type is "Digital" 0- Active From Starting 1- Active From Safety On 2- Always Active	0	2	2	
Conf. AI2 active dely	Configurable Analog Input-2 Active Delay (If Conf. AI2 type is "Digital")	0	250	0	Sec
Conf. AI2 low prealrm	Config. Analog Input-2 Low Pre-Alarm	0 (dis)	300	0 (dis)	ºC
Conf. AI2 low reset	Config. Analog Input-2 Low Reset	0	300	60	ºC
Conf. AI2 low shutdwn	Config. Analog Input-2 Low Shutdown	0 (dis)	300	0 (dis)	ºC
Conf. AI2 high prealr	Config. Analog Input-2 High Pre-Alarm	0 (dis)	300	0 (dis)	ºC
Conf. AI2 high reset	Config. Analog Input-2 High Reset	0	300	90	ºC
Conf. AI2 high shutd.	Config. Analog Input-2 High Shutdown	0 (dis)	300	0 (dis)	ºC
Conf. AI2 control ON	Config. Analog Input-2 Control ON	0 (dis)	300	0 (dis)	ºC
Conf. AI2 control OFF	Config. Analog Input-2 Control OFF	0	300	75	ºC
Cnf.AI2 sens err.shut	Conf. AI2 Sensor Error Shutdown	DISBL/ENABL		ENABL	

SENDER LINEARISATION (*Inputs->Sender linearisation*)		Min	Max	Default	Unit
Oil pressure sender 1	Oil Pressure Sender Point-1	0	1300	15	R
Oil pressure 1	Oil Pressure Point-1	0.0	30.0	0.0	BAR
Oil pressure sender 2	Oil Pressure Sender Point-2	0	1300	31	R
Oil pressure 2	Oil Pressure Point-2	0.0	30.0	1.0	BAR
Oil pressure sender 3	Oil Pressure Sender Point-3	0	1300	49	R
Oil pressure 3	Oil Pressure Point-3	0.0	30.0	2.0	BAR
Oil pressure sender 4	Oil Pressure Sender Point-4	0	1300	66	R
Oil pressure 4	Oil Pressure Point-4	0.0	30.0	3.0	BAR
Oil pressure sender 5	Oil Pressure Sender Point-5	0	1300	85	R
Oil pressure 5	Oil Pressure Point-5	0.0	30.0	4.0	BAR
Oil pressure sender 6	Oil Pressure Sender Point-6	0	1300	101	R
Oil pressure 6	Oil Pressure Point-6	0.0	30.0	5.0	BAR
Oil pressure sender 7	Oil Pressure Sender Point-7	0	1300	117	R
Oil pressure 7	Oil Pressure Point-7	0.0	30.0	6.0	BAR
Oil pressure sender 8	Oil Pressure Sender Point-8	0	1300	132	R
Oil pressure 8	Oil Pressure Point-8	0.0	30.0	7.0	BAR
Oil pressure sender 9	Oil Pressure Sender Point-9	0	1300	149	R
Oil pressure 9	Oil Pressure Point-9	0.0	30.0	8.0	BAR
Oil pressure sender 10	Oil Pressure Sender Point-10	0	1300	178	R
Oil pressure 10	Oil Pressure Point-10	0.0	30.0	10.0	BAR
Temperature sender 1	Temperature Sender Point-1	0	1300	579	R
Temperature 1	Temperature Point-1	0	300	28	ºC
Temperature sender 2	Temperature Sender Point-2	0	1300	404	R
Temperature 2	Temperature Point-2	0	300	35	ºC
Temperature sender 3	Temperature Sender Point-3	0	1300	342	R
Temperature 3	Temperature Point-3	0	300	40	ºC
Temperature sender 4	Temperature Sender Point-4	0	1300	250	R
Temperature 4	Temperature Point-4	0	300	50	ºC
Temperature sender 5	Temperature Sender Point-5	0	1300	179	R
Temperature 5	Temperature Point-5	0	300	60	ºC
Temperature sender 6	Temperature Sender Point-6	0	1300	136	R
Temperature 6	Temperature Point-6	0	300	70	ºC
Temperature sender 7	Temperature Sender Point-7	0	1300	103	R
Temperature 7	Temperature Point-7	0	300	80	ºC
Temperature sender 8	Temperature Sender Point-8	0	1300	77	R
Temperature 8	Temperature Point-8	0	300	90	ºC
Temperature sender 9	Temperature Sender Point-9	0	1300	67	R
Temperature 9	Temperature Point-9	0	300	95	ºC
Temperature sender 10	Temperature Sender Point-10	0	1300	63	R
Temperature 10	Temperature Point-10	0	300	98	ºC
Conf. AI1 sender 1	Configurable Analog Input-1 Sender Point-1	0	1300	10	R
Conf. AI1 value 1	Configurable Analog Input-1 Point-1	0	3000	0	%
Conf. AI1 sender 2	Configurable Analog Input-1 Sender Point-2	0	1300	30	R
Conf. AI1 value 2	Configurable Analog Input-1 Point-2	0	3000	11	%
Conf. AI1 sender 3	Configurable Analog Input-1 Sender Point-3	0	1300	50	R
Conf. AI1 value 3	Configurable Analog Input-1 Point-3	0	3000	22	%
Conf. AI1 sender 4	Configurable Analog Input-1 Sender Point-4	0	1300	70	R
Conf. AI1 value 4	Configurable Analog Input-1 Point-4	0	3000	33	%
Conf. AI1 sender 5	Configurable Analog Input-1 Sender Point-5	0	1300	90	R
Conf. AI1 value 5	Configurable Analog Input-1 Point-5	0	3000	44	%

Conf. AI1 sender 6	Configurable Analog Input-1 Sender Point-6	0	1300	110	R
Conf. AI1 value 6	Configurable Analog Input-1 Point-6	0	3000	55	%
Conf. AI1 sender 7	Configurable Analog Input-1 Sender Point-7	0	1300	130	R
Conf. AI1 value 7	Configurable Analog Input-1 Point-7	0	3000	66	%
Conf. AI1 sender 8	Configurable Analog Input-1 Sender Point-8	0	1300	150	R
Conf. AI1 value 8	Configurable Analog Input-1 Point-8	0	3000	77	%
Conf. AI1 sender 9	Configurable Analog Input-1 Sender Point-9	0	1300	170	R
Conf. AI1 value 9	Configurable Analog Input-1 Point-9	0	3000	88	%
Conf. AI1 sender 10	Configurable Analog Input-1 Sender Point-10	0	1300	190	R
Conf. AI1 value 10	Configurable Analog Input-1 Point-10	0	3000	100	%
Conf. AI2 sender 1	Configurable Analog Input-2 Sender Point-1	0	1300	579	R
Conf. AI2 value 1	Configurable Analog Input-2 Point-1	0	300	28	ºC
Conf. AI2 sender 2	Configurable Analog Input-2 Sender Point-2	0	1300	404	R
Conf. AI2 value 2	Configurable Analog Input-2 Point-2	0	300	35	ºC
Conf. AI2 sender 3	Configurable Analog Input-2 Sender Point-3	0	1300	342	R
Conf. AI2 value 3	Configurable Analog Input-2 Point-3	0	300	40	ºC
Conf. AI2 sender 4	Configurable Analog Input-2 Sender Point-4	0	1300	250	R
Conf. AI2 value 4	Configurable Analog Input-2 Point-4	0	300	50	ºC
Conf. AI2 sender 5	Configurable Analog Input-2 Sender Point-5	0	1300	179	R
Conf. AI2 value 5	Configurable Analog Input-2 Point-5	0	300	60	ºC
Conf. AI2 sender 6	Configurable Analog Input-2 Sender Point-6	0	1300	136	R
Conf. AI2 value 6	Configurable Analog Input-2 Point-6	0	300	70	ºC
Conf. AI2 sender 7	Configurable Analog Input-2 Sender Point-7	0	1300	103	R
Conf. AI2 value 7	Configurable Analog Input-2 Point-7	0	300	80	ºC
Conf. AI2 sender 8	Configurable Analog Input-2 Sender Point-8	0	1300	77	R
Conf. AI2 value 8	Configurable Analog Input-2 Point-8	0	300	90	ºC
Conf. AI2 sender 9	Configurable Analog Input-2 Sender Point-9	0	1300	67	R
Conf. AI2 value 9	Configurable Analog Input-2 Point-9	0	300	95	ºC
Conf. AI2 sender 10	Configurable Analog Input-2 Sender Point-10	0	1300	63	R
Conf. AI2 value 10	Configurable Analog Input-2 Point-10	0	300	98	ºC

CONF. INPUT-X (*Inputs->Conf. input-x*)		Min	Max	Default	Unit
Dis,user conf.or list	0- Disable 1- User Configured 2- Select From List	0(dis)	2	in1=2 in2, 3=1 in4, 5=2 in6=1	
Polarity	0- Normally Open (Close To Activate) 1- Normally Close (Open To Activate)	0	1	in1, 3=1 in2, 4=0 in5, 6=0	
Indication	If User Configured 0- Status 1- Warning Non-Latching 2- Warning Latching 3- Electrical Trip 4- Shutdown	0	4	in1=0 in2=0 in3=4 in4=0 in5=0 in6=0	
Activation	If User Configured 0- Active From Starting 1- Active From Safety On 2- Always Active	0	2	in1, 2=2 in3, 4=2 in5, 6=2	
Select from list	If Select From List 0-Remote Start On Load 1-Remote Start Off Load 2-Auxiliary Mains Fail 3-Working Calendar Active 4-Master Auto Ready 5-Simulate Alarm Reset Button 6-Simulate Auto Button 7-Simulate Test Button 8-Simulate Manual Button 9-Simulate Start Button 10-Simulate Stop Button 11-Generator Closed Auxiliary 12-Generator Load Inhibit 13-Mains Closed Auxiliary 14-Mains Load Inhibit 15-Auto Restore Inhibit 16-Auto Start Inhibit 17-Panel Lock 18-Scheduled Runs(Exercise) Inhibited 19-Priority Select 20-Transfer To Generator/Open Mains 21-Transfer To Mains/Open Generator 22-Remote Inhibit 23-Being Found Alive 24-Low Battery 25-Emergency Stop (for only input-1) 25-Sprinkler Mode On Load (for only input-2,3,6) 25-Low Oil Pressure (for only input-4) 25-High Temperature (for only input-5) 26-Low Oil Level (for only input-4) 26-Emergency Stop No-Latching (for only input-1) 26-Sprinkler Mode Off Load (for only input-2,3,6)	0	in1=26 in2=26 in3=26 in4=26 in5=25 In6=26	in1=25 in2=3 in3=4 in4=25 in5=25 in6=7	
Active delay	Input active delay	0	250	in1=0 in2, 3=5 in4, 5=0 in6=5	Sec

Note-1 : x = 1(input-1), 2(input-2), 3(input-3), 4(input-4), 5(input-5), or 6(input-6)

Note-2 : 25 - Emergency Stop (for only input-1)
25 - Low Oil Pressure (for only input-4)
25 - Sprinkler Mode On Load (for only input-2,3,6)
25 - High Temperature (for only input-5)
26 - Low Oil Level (for only input-4)
26 - Emergency Stop No-Latching (for only input-1)
26 - Sprinkler Mode Off Load (for only input-2,3,6)

Note-3 : dis = disable

CONF. INPUT-7 (*Inputs->Conf. input-7*)		Min	Max	Default	Unit
Input type	0- Disable 1- User Configured (Digital) 2- Select From List (Digital) 3- Cabin Temperature (Anolog)*[1]	0(dis)	3	3	
Polarity	If Input Type is Digital 0- Normally Open (Close To Activate) 1- Normally Close (Open To Activate)	0	1	0	
Indication	If Input Type is User Configured 0- Status 1- Warning Non-Latching 2- Warning Latching 3- Electrical Trip 4- Shutdown	0	4	0	
Activation	If Input Type is User Configured 0- Active From Starting 1- Active From Safety On 2- Always Active	0	2	2	
Select from list	If Input Type is Select From List 0-Remote Start On Load 1-Remote Start Off Load 2-Auxiliary Mains Fail 3-Working Calendar Active 4-Master Auto Ready 5-Simulate Alarm Reset Button 6-Simulate Auto Button 7-Simulate Test Button 8-Simulate Manual Button 9-Simulate Start Button 10-Simulate Stop Button 11-Generator Closed Auxiliary 12-Generator Load Inhibit 13-Mains Closed Auxiliary 14-Mains Load Inhibit 15-Auto Restore Inhibit 16-Auto Start Inhibit 17-Panel Lock 18-Scheduled Runs(Exercise) Inhibited 19-Priority Select 20-Transfer To Generator/Open Mains 21-Transfer To Mains/Open Generator 22-Remote Inhibit 23-Being Found Alive 24-Low Battery 25-Sprinkler Mode On Load 26-Sprinkler Mode Off Load	0	26	8	
Active delay	Input active delay (If Input Type is Digital)	0	250	5	Sec
Cabin temp.low prealr*[2]	Cabin temperature low prealarm	-50(dis)	100	dis	ºC
Cabin temp.low reset*[2]	Cabin temperature low prealarm reset	-50	100	0	ºC
Cabin temp.low shutd.*[2]	Cabin temperature low shutdown	-50(dis)	100	dis	ºC
Cabin temp.high preal*[2]	Cabin temperature high prealarm reset	-50(dis)	100	dis	ºC
Cabin temp.high reset*[2]	Cabin temperature high prealarm	-50	100	0	ºC
Cabin temp.high shutd*[2]	Cabin temperature high shutdown	-50(dis)	100	dis	ºC

Note: *[1] = This option is only available at Trans-AMF_C unit.
*[2] = These parameters are only available at Trans-AMF_C unit
dis = disable

CONF. EXP. INPUT-X (*Inputs->Conf. exp. input-x*)		Min	Max	Default	Unit
Dis,user conf.or list	0- Disable 1- User Configured 2- Select From List	0(dis)	2	1	
Hardware type	0-> -Ve (Switched To Battery -) 1-> +Ve (Switched To Battery +)	0	1	0	
Polarity	0- Normally Open (Close To Activate) 1- Normally Close (Open To Activate)	0	1	0	
Indication	If User Configured 0- Status 1- Warning Non-Latching 2- Warning Latching 3- Electrical Trip 4- Shutdown	0	4	0	
Activation	If User Configured 0- Active From Starting 1- Active From Safety On 2- Always Active	0	2	2	
Select from list	If Select From List 2-Auxiliary Mains Fail 3-Working Calendar Active 4-Master Auto Ready 5-Simulate Alarm Reset Button 6-Simulate Auto Button 7-Simulate Test Button 8-Simulate Manual Button 9-Simulate Start Button 10-Simulate Stop Button 11-Generator Closed Auxiliary 12-Generator Load Inhibit 13-Mains Closed Auxiliary 14-Mains Load Inhibit 15-Auto Restore Inhibit 16-Auto Start Inhibit 17-Panel Lock 18-Scheduled Runs Inhibited 19-Priority Select 20-Transfer To Generator/Open Mains 21-Transfer To Mains/Open Generator	2	21	2	
Active delay	Input active delay	0	250	5	Sec

Note-1 : x = 1(exp. input-1), 2(exp. input-2), 3(exp. input-3), 4(exp. input-4), 5(exp. input-5), 6(exp. input-6), 7(exp. input-7) or 8(exp. input-8)

Note-2 : dis = disable

4.2.6 Outputs

CONF. OUTPUT-1 (*Outputs->Conf. output-1*)		Min	Max	Default	Unit
Polarity	0- Normally Open (Close To Activate) 1- Normally Close (Open To Activate)	0	1	0	
Function	0-NOT USED 1-AIR FLAP CONTROL 2-ALARM RESET 3-AUDIBLE ALARM 4-AUTO START INHIBIT 5-AUXILIARY MAINS FAILURE 6-BATTERY HIGH VOLTAGE 7-BATTERY LOW VOLTAGE 8-CALLING FOR SCHEDULED RUN(EXERCISE) 9-CAN ECU POWER 10-CAN ECU STOP 11-CHARGE ALTERNATOR FAILURE 12-COMMON ALARM 13-COMMON ELECTRICAL TRIP ALARM 14-COMMON SHUTDOWN ALARM 15-COMMON WARNING ALARM 16-COOLING FAN AFTER START 17-COOLING FAN AFTER STOP 18-COOLANT TEMPERATURE HIGH PRE-ALARM 19-COOLANT TEMPERATURE HIGH SHUTDOWN 20-COOLING DOWN TIMER IN PROGRESS 21-CRANK RELAY ENERGISED 22-DELAYED ALARMS ACTIVE 23-DIGITAL INPUT1 ALARM 24-DIGITAL INPUT2 ALARM 25-DIGITAL INPUT3 ALARM 26-DIGITAL INPUT4 ALARM 27-DIGITAL INPUT5 ALARM 28-DIGITAL INPUT6 ALARM 29-DIGITAL INPUT7 ALARM 30-EXPANSION INPUT1 ALARM 31-EXPANSION INPUT2 ALARM 32-EXPANSION INPUT3 ALARM 33-EXPANSION INPUT4 ALARM 34-EXPANSION INPUT5 ALARM 35-EXPANSION INPUT6 ALARM 36-EXPANSION INPUT7 ALARM 37-EXPANSION INPUT8 ALARM 38-EARTH FAULT 39-EMERGENCY STOP 40-FAIL TO START ALARM 41-FAIL TO STOP ALARM 42-CONF. AI1 CONTROL 43-FUEL RELAY ENERGISED 44-GAS ENGINE IGNITION OUTPUT 45-GENERATOR AT REST 46-GENERATOR AVAILABLE 47-GENERATOR CLOSED AUXILIARY 48-GENERATOR FAILED TO CLOSE 49-GENERATOR FAILED TO OPEN 50-GENERATOR HIGH FREQUENCY PRE-ALARM 51-GENERATOR HIGH FREQUENCY SHUTDOWN 52-GENERATOR HIGH VOLTAGE PRE-ALARM 53-GENERATOR HIGH VOLTAGE SHUTDOWN 54-GENERATOR LOAD INHIBIT 55-GENERATOR LOW FREQUENCY PRE-ALARM 56-GENERATOR LOW FREQUENCY SHUTDOWN 57-GENERATOR LOW VOLTAGE PRE-ALARM 58-GENERATOR LOW VOLTAGE SHUTDOWN 59-GENERATOR STOPPING 60-GENERATOR OPEN BREAKER 61-HORN OUTPUT LATCHED 62-HORN OUTPUT PULSED 63-MASTER AUTO READY 64-CONF. AI2 CONTROL 65-LOSS OF MAGNETIC PICK-UP SPEED SIGNAL 66-LOW TEMPERATURE 67-MAINTENANCE DUE ALARM 68-MAINS CLOSED AUXILIARY 69-MAINS FAILED TO CLOSE 70-MAINS FAILED TO OPEN 71-MAINS FAILURE 72-MAINS HIGH FREQUENCY 73-MAINS HIGH VOLTAGE 74-MAINS LOAD INHIBIT 75-MAINS LOW FREQUENCY 76-MAINS LOW VOLTAGE 77-MAINS OPEN BREAKER 78-NO LOADING COMMAND 79-OIL PRESSURE LOW PRE-ALARM 80-OIL PRESSURE LOW SHUTDOWN 81-CONF.AI1.HIGH PREA 82-CONF.AI1.HIGH SHUT 83-OVER CURRENT PRE-ALARM 84-OVER CURRENT 85-OVER POWER PRE-ALARM 86-OVER POWER SHUTDOWN 87-OVERSPEED PRE-ALARM 88-OVERSPEED SHUTDOWN 89-PANEL LOCK 90-PRE-HEAT(during preheat timer) 91-PRE-HEAT(until end of cranking) 92-PRE-HEAT(until end of warming) 93-PRE-HEAT(until end safety on) 94-REMOTE START PRESENT 95-REMOTE STOP DELAY IN PROGRESS 96-SHORT CIRCUIT 97-SMOKE LIMITING 98-STARTING ALARM 99-STARTING ALARMS ARMED 100-STOP RELAY ENERGISED 101-SYSTEM IN AUTO MODE 102-SYSTEM IN MANUAL MODE 103-SYSTEM IN STOP MODE 104-SYSTEM IN TEST MODE 105-UNDER CURRENT PRE-ALARM 106-UNDER CURRENT 107-UNDER POWER PRE-ALARM 108-UNDER POWER SHUTDOWN 109-UNDERSPEED PRE-ALARM 110-UNDERSPEED SHUTDOWN 111-WAITING FOR GENERATOR 112-DUAL COMMUNICATION ERROR 113-LOAD SUPPLY FROM GENERATOR 114-LOAD SUPPLY FROM MAINS 115-CONFIGURABLE ANALOG INPUT 1 LOW PRE-ALARM 116-CONFIGURABLE ANALOG INPUT 1 LOW SHUTDOWN 117-CONFIGURABLE ANALOG INPUT 2 LOW PRE-ALARM 118-CONFIGURABLE ANALOG INPUT 2 LOW SHUTDOWN 119-CONFIGURABLE ANALOG INPUT 2 HIGH PRE-ALARM 120-CONFIGURABLE ANALOG INPUT 2 HIGH SHUTDOWN 121-CHOKE ACTIVE 122-REMOTE CONTROL ACTIVE 123-REVERSE POWER 124-CABIN TEMPERATURE LOW PRE-ALARM (only available at Trans-AMF_C unit) 125-CABIN TEMPERATURE LOW SHUTDOWN (only available at Trans-AMF_C unit) 126-CABIN TEMPERATURE HIGH PRE-ALARM (only available at Trans-AMF_C unit) 127-CABIN TEMPERATURE HIGH SHUTDOWN (only available at Trans-AMF_C unit) 128-HEATER CONTROL 129-REMOTE OUTPUT 130-UNBALANCE LOAD 131-WATER PUMP 132-ATS OPEN(0) 133-BATTERY CHARGER OPERATION 134-RESERVED 135-RESERVED 136-SYNCHRON POSITION 137-OVER LOAD STEP 1 138-OVER LOAD STEP 2	0	138	43	

CONF. OUTPUT-2 (*Outputs->Conf. output-2*)		Min	Max	Default	Unit
Polarity	0- Normally Open (Close To Activate) 1- Normally Close (Open To Activate)	0	1	0	
Function	The same as Configurable Output-1 options	0	138	21	

CONF. OUTPUT-3 (*Outputs->Conf. output-3*)		Min	Max	Default	Unit
Polarity	0- Normally Open (Close To Activate) 1- Normally Close (Open To Activate)	0	1	0	
Function	The same as Configurable Output-1 options	0	138	62	

CONF. OUTPUT-4 (*Outputs->Conf. output-4*)		Min	Max	Default	Unit
Polarity	0- Normally Open (Close To Activate) 1- Normally Close (Open To Activate)	0	1	0	
Function	The same as Configurable Output-1 options	0	138	9	

CONF. OUTPUT-5 (*Outputs->Conf. output-5*)		Min	Max	Default	Unit
Polarity	0- Normally Open (Close To Activate) 1- Normally Close (Open To Activate)	0	1	0	
Function	The same as Configurable Output-1 options	0	138	10	

CONF. OUTPUT-6 (*Outputs->Conf. output-6*)		Min	Max	Default	Unit
Polarity	0- Normally Open (Close To Activate) 1- Normally Close (Open To Activate)	0	1	0	
Function	The same as Configurable Output-1 options	0	138	12	

CONF. EXP. OUTPUT-1 (*Outputs->Conf. exp. output-1*)		Min	Max	Default	Unit
Polarity	0- Normally Open (Close To Activate) 1- Normally Close (Open To Activate)	0	1	0	
Function	The same as Configurable Output-1 options	0	138	12	

CONF. EXP. OUTPUT-2 (*Outputs->Conf. exp. output-2*)		Min	Max	Default	Unit
Polarity	0- Normally Open (Close To Activate) 1- Normally Close (Open To Activate)	0	1	0	
Function	The same as Configurable Output-1 options	0	138	12	

CONF. EXP. OUTPUT-3 (*Outputs->Conf. exp. output-3*)		Min	Max	Default	Unit
Polarity	0- Normally Open (Close To Activate) 1- Normally Close (Open To Activate)	0	1	0	
Function	The same as Configurable Output-1 options	0	138	12	

CONF. EXP. OUTPUT-4 (*Outputs->Conf. exp. output-4*)		Min	Max	Default	Unit
Polarity	0- Normally Open (Close To Activate) 1- Normally Close (Open To Activate)	0	1	0	
Function	The same as Configurable Output-1 options	0	138	12	

CONF. EXP. OUTPUT-5 (*Outputs->Conf. exp. output-5*)		Min	Max	Default	Unit
Polarity	0- Normally Open (Close To Activate) 1- Normally Close (Open To Activate)	0	1	0	
Function	The same as Configurable Output-1 options	0	138	12	

CONF. EXP. OUTPUT-6 (*Outputs->Conf. exp. output-6*)		Min	Max	Default	Unit
Polarity	0- Normally Open (Close To Activate) 1- Normally Close (Open To Activate)	0	1	0	
Function	The same as Configurable Output-1 options	0	138	12	

CONF. EXP. OUTPUT-7 (*Outputs->Conf. exp. output-7*)		Min	Max	Default	Unit
Polarity	0- Normally Open (Close To Activate) 1- Normally Close (Open To Activate)	0	1	0	
Function	The same as Configurable Output-1 options	0	138	12	

CONF. EXP. OUTPUT-8 (*Outputs->Conf. exp. output-8*)		Min	Max	Default	Unit
Polarity	0- Normally Open (Close To Activate) 1- Normally Close (Open To Activate)	0	1	0	
Function	The same as Configurable Output-1 options	0	138	12	

4.2.7 Timers

START TIMERS (*Timers->Start timers*)		Min	Max	Default	Unit
Mains transient delay	Mains Transient Delay	0.0	20.0	2.0	Sec
Mains fail start dely	Mains Fail Start Delay	0	9999	0	Sec
Remote start delay	Remote Start Delay	0	3600	4	Sec
Pre-heat	Pre-Heat	0	250	3	Sec
Pre-heat bypass	Pre-Heat Bypass	0	250	0	Min
Safety on delay	Safety On Delay	0	99	5	Sec
Warming up time	Warmup Time	0	250	3	Sec
Horn duration	Horn Duration	0 (dis)	999	60	Sec
Chg. excitation time	Charge Excitation Time	0	99(cont)	15	Sec
Cooling fan time	Cooling Fan Time	0	250	180	Sec
Idle mode time	Idle Mode Time (Smoke Limiting)	0 (dis)	3600	dis	Sec
Idle mode time off	Idle Mode Time Off (Smoke Limiting Off)	0	250	5	Sec
Bat.charger oper time	Battery Charger Operation Time	0 (dis)	9999	0 (dis)	Min
Bat.charger rest time	Battery Charger Rest Time	0 (dis)	9999	0 (dis)	Min

STOPPING TIMERS (*Timers->Stopping timers*)		Min	Max	Default	Unit
Mains return delay	Mains Return Delay	0	3600	5	Sec
Remote stop delay	Remote Stop Delay	0	250	4	Sec
Cooling time	Cooling Time	0 (dis)	3600	60	Sec
Fail to stop delay	Fail To Stop Time	15	999	30	Sec
Battery charging time	Battery Charging Time	1	9999	5	Min
Idle stop time	Idle Stop Time	0 (dis)	3600	dis	Sec
Engine stopping delay	Engine Stopping Delay	0	999	0	Sec

4.2.8 Expansion Modules

IO (1-8) MODULE (*Expansion modules->IO (1-8)*)		Min	Max	Default	Unit
Disable/enable select	Expansion I/O Module Selection	ENABL/DISBL		DISBL	

DIAL-UP & ETHERNET (*Expansion modules->Dial-up & Ethernet*)		Min	Max	Default	Unit
Disable/enable select	Expansion Dal-up&Ethernet Module Selection	ENABL/DISBL		ENABL	
Call back selection	Call Back Selection	ENABL/DISBL		DISBL	

GPRS MODULE (*Expansion modules->GPRS*)		Min	Max	Default	Unit
Disable/enable select	Expansion GPRS Module Selection	0-DISABLE 1-GPRS SERVER 2-GPRS CLIENT 3-SMS		2-GPRS CLIENT	
Call back selection	Call Back Selection	ENABL/DISBL		DISBL	
Cell inf refresh rate	Cell info refresh rate	0(dis)	999	15	Min
Location data	Location data	ENABL/DISBL		DISBL	
Location warning	Location warning	1(dis)	999	1(dis)	Km

Note: dis = disable cont = continuous

DUAL SET MODULE (*Expansion modules->Dual set*)		Min	Max	Default	Unit
Disable/enable select	Expansion Dual Set Module Selection	ENABL/DISBL		ENABL	
Node ID	Node Address	1	2	1	
Working period	Dual Working Period	0:00	98:59	1:00	H.Min
Early start time	Early Start Time	0	250	15	Sec
Remote priority selct	Remote Priority Selection: 0- Disable, 1- Priority, 2- None Priority	0(dis)	2	dis	

GPRS WEB MODULE (*Expansion modules->GPRS Web)*		Min	Max	Default	Unit
Disable/enable select	GPRS-Web Module Selection	ENABL/DISBL		ENABL	

4.2.9 Synchronization

SYNCH CHECK (Synchronization->*Synch Check*)		Min	Max	Default	Unit
Synchronization check	Synchronization check enable/disable	ENABL/DISBL		DISBL	
Synced working time	Synced working time	0.0	25.0	0.5	Sec
Synch. fail time	Synchronization fail time	0	250	30	Sec
Max voltage diff.	Max voltage difference	0	20	5	V~
Voltage type	Voltage type	0=Ph-N / 1=Ph-Ph		0=Ph-N	
Max frequency diff.	Max frequency difference	0.0	2.0	0.5	Hz
Max angle difference	Max angle difference	0	20	10	º
Angle offset	Angle offset	-150	+150	0	º
Show synch fail	Show synchronization fail	ENABL/DISBL		ENABL	

4.2.10 User Adjustment

MAINS VOLTAGE OFFSET (*User adjustment->Mains voltage offset*)		Min	Max	Default	Unit
Mains V1 offset	Mains V1 Offset	-20	20	0	V~
Mains V2 offset	Mains V2 Offset	-20	20	0	V~
Mains V3 offset	Mains V3 Offset	-20	20	0	V~

GEN. VOLTAGE OFFSET (*User adjustment->Gen. voltage offset*)		Min	Max	Default	Unit
Gen. V1 offset	Generator V1 Offset	-20	20	0	V~
Gen. V2 offset	Generator V2 Offset	-20	20	0	V~
Gen. V3 offset	Generator V3 Offset	-20	20	0	V~

CURRENT OFFSET (*User adjustment->Current offset*)		Min	Max	Default	Unit
Current I1 offset	Current I1 Offset	-20	20	0	A~
Current I2 offset	Current I2 Offset	-20	20	0	A~
Current I3 offset	Current I3 Offset	-20	20	0	A~
E/F. Current offset	Earth current I3 Offset	-20	20	0	A~

BATTERY&CHRG GEN.VOL (*User adjustment->Battery&chrg gen.vol*)		Min	Max	Default	Unit
Batt.volt offset	Battery Voltage Offset	-5.0	5.0	0	V⎓
Gen.chg.volt offset	Charge Generator Voltage Offset	-5.0	5.0	0	V⎓

SENDER INPUTS OFFSET (*User adjustment->Sender inputs offset*)		Min	Max	Default	Unit
Oil Pressure offset	Oil Pressure Offset	-2.0	2.0	0.0	BAR
Temperature offset	Coolant Temperature Offset	-20	20	0	ºC
Conf. AI1 offset	Configurable Analog Input-1 Offset	-200	200	0	%
Conf. AI2 offset	Configurable Analog Input-2 Offset	-20	20	0	ºC

Note: dis = disable

5. Specifications

Equipment use	: Electrical control equipment for generating sets.
Housing & Mounting	: 229 mm x 152 mm x 41 mm. (including connectors). Plastic housing for panel mounting.
Panel Cut-Out	: 182mm x 135mm.
Protection Against Mech. Impacts	: 1Joule (IK06).
Protection Class	: IP65 at front panel.
Weight	: Approximately 0,53 Kg.
Environmental rating	: Standard, indoor at an altitude of less then 2000 meters with non-condensing humidity.
Operating/Storage Temperature	: -20°C to +70°C / -30°C to +80°C
Operating/Storage Humidity	: 95 % max. (non-condensing)
Vibration	: EN 60068-2-6 Ten sweeps in each of three major axes 5Hz to 8Hz @ +/-7.5mm, 8Hz to 500Hz @ 2gn.
Shock	: EN 60068-2-27 Three shocks in each of three major axes 15gn in 11mS.
Installation Over Volt. Category	: II Appliances, portable equipment
Pollution Degree	: II, Normal office or workplace, non conductive pollution
Mode of Operation	: Continuous.
Supply Voltage and Power	: 8 to 32 V⎓ (Peak: 36 V⎓) - 3.2W
Cranking Dropouts	: Battery voltage can be “0” VDC for max. 50 ms during cranking (battery voltage should be at least nominal voltage before cranking).
Battery Voltage Measurement	: 8 to 32 V⎓, accuracy: 1 % FS, resolution: 0,1 V
Mains Voltage Measurement	: 10 to 300 VAC Ph-N, 5 to 99.9 Hz. Accuracy: 1 % FS, Resolution: 1 V. Harmonic analysis: Up to 31st.
Mains Frequency	: 5 to 99.9Hz (min. 20 VAC Ph-N) Accuracy: 0,25 % FS, Resolution: 0,1 Hz.
Generator Voltage Measurement	: 10 to 300 VAC Ph-N, 5 to 99.9 Hz. Accuracy: 1 % FS, Resolution: 1 V. Harmonic analysis: Up to 31st.
Generator Frequency	: 5 to 99.9Hz (min. 20 VAC Ph-N) Accuracy: 0,25 % FS, Resolution: 0,1 Hz.
Magnetic Pickup Input	: 35 to 10000 Hz (1 to 35 volts peak continuously). Accuracy: 0,25 % FS.
CT secondary	: 5A. Harmonic analysis: Up to 31st.
Charge Generator Excitation	: 210mA @12V, 105mA @24V. Nominal 2.5W.
Charge Gen. Vol. Measurement	: 8 to 32 V⎓, accuracy: 1 % FS, resolution: 0,1 V.
Sender Measurement	: 0 to 1300 ohm, accuracy: 1 % FS, resolution: 1 ohm.
Canbin Temp. Measurement	: -50 to +100 ºC, accuracy: 1 % FS, resolution: 1 ºC. Only available at Trans-AMF_C unit.
Communication interface	: USB programming and communication port, RS-485 (optional), CanBus communication with 1939 ECU.
Optional Expansion I/O Module	: Expansion I/O module including 8 inputs and 8 outputs.
Optional Comm. Modules	: Ethernet/Dial-up, GSM/GPRS, RS-232/485/422, Dual Set, Web Server and GPRS-Web modules.

Relay Outputs	: Generator contactor relay output 8A@250V~ Mains contactor relay output 8A@250V~ Configurable output-5 5A@250V~ Configurable output-6 5A@250V~
Transistor Outputs	: Fuel or Configurable output-1 1A at DC supply voltage Crank or Configurable output-2 1A at DC supply voltage Configurable output-3 1A at DC supply voltage Configurable output-4 1A at DC supply voltage All transistor ouputs supplied from DC supply terminal 22
Approvals	: CE, UKCA, EAC

6. Other Informations

Manufacturer Information:
Emko Elektronik Sanayi ve Ticaret A.Ş.
Bursa Organize Sanayi Bölgesi,
Fethiye OSB Mah. Turkuaz Cad. No:15
16215 Nilüfer - BURSA / TÜRKİYE
Phone : +90 224 261 19 00
Fax : +90 224 261 19 12

Repair and maintenance service information:
Emko Elektronik Sanayi ve Ticaret A.Ş.
Bursa Organize Sanayi Bölgesi,
Fethiye OSB Mah. Turkuaz Cad. No:15
16215 Nilüfer - BURSA / TÜRKİYE
Phone : +90 224 261 19 00
Fax : +90 224 261 19 12

7. Order Information

Trans-AMF_W: Automatic mains failure unit with USB communication,
Water level sensing input feature

Trans-AMF_C: Automatic mains failure unit with USB communication,
Cabin temperature analog input feature

Trans-AMF.RS485_W: Automatic mains failure unit with USB and RS-485 communication,
Water level sensing input feature

Trans-AMF.RS485_C: Automatic mains failure unit with USB and RS-485 communication,
Cabin temperature analog input feature

PC Software

https://www.emkoelektronik.com.tr/en/products/trans-amf

PRC Technologies Corp., Ltd. ลาดพร้าว 101 กรุงเทพ 10240

โทรศัพท์ : 02 530 1714, 02 932 1711 มือถือ : 086 360 8600

อีเมล : contact@prctech.net LINE ID1 : prctec-info, LINE ID2 : @prct