

TRANS-ATS.D

AUTOMATIC TRANSFER SWITCH

1. Introduction

1.1 General Specifications

The unit provides the voltage monitoring for both sources and automatic transfer switching. In the event of any Source voltage failure, the remote start relay output is energized(if generator application selected) and the unit automatically transfers the load from one source to other . Both automatic and manual control is possible. A test mode is also available which allows the generator with the higher priority to be run.

The unit is extensively programmable through the front panel, with password protection on two levels. Operational parameters can also be monitored and controlled from a PC via a built-in USB port.

The unit monitors both sources and gives warning of any faults that are detected.
If a fault is detected, the unit shuts down the engine(if generator application selected), transfers load to the other source and shows the failure message on the LCD display.

1.2 Warranty

EMKO Elektronik warrants that the equipment delivered is free from defects in material and workmanship. This warranty is provided for a period of two years. The warranty period starts from the delivery date. This warranty is in force if duty and responsibilities which are determined in warranty document and instruction manual performs by the customer completely.

1.3 Maintenance

Repairs should only be performed by trained and specialized personnel. Cut power to the device before accessing internal parts.
Do not clean the case with hydrocarbon-based solvents (Petrol, Trichlorethylene etc.). Use of these solvents can reduce the mechanical reliability of the device. Use a cloth dampened in ethyl alcohol or water to clean the external plastic case.

2. Installation

Before beginning installation of this product, please read the instruction manual and warnings below carefully.

A visual inspection of this product for possible damage occured during shipment is recommended before installation. It is your responsibility to ensure that qualified mechanical and electrical technicians install this product.

If there is danger of serious accident resulting from a failure or defect in this unit , power off the system and seperate the electrical connection of the device from the system.

Keep the power off until all of the wiring is completed so that electric shock and trouble with the unit can be prevented.

2.1 Unit Configuration

The unit can be programmed using the buttons and LCD display on the front panel or PC Software.

2.2 Panel Mounting

The unit is designed for panel mounting. Fixing is by two screw fixings.
1- Insert the unit in the panel cut-out from the front.
2- Insert the fixings in the slotted at the corners of the unit and tighten the fixing screws to secure the unit against the panel.

During the equipment is putted in hole on the metal panel while mechanical installation some metal burrs can cause injury on hands, you must be careful.

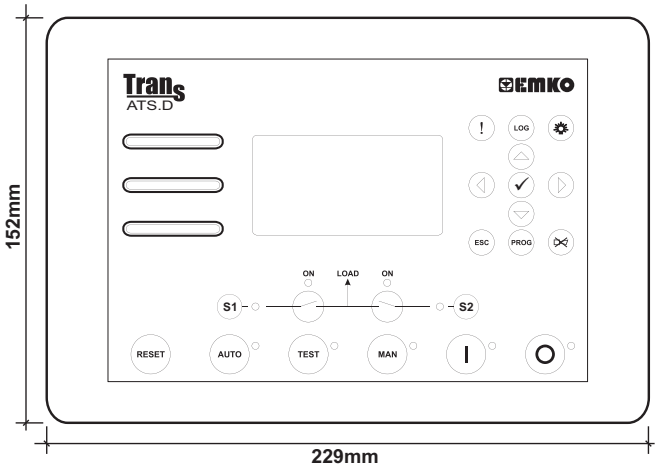

Figure 2.1 Front View

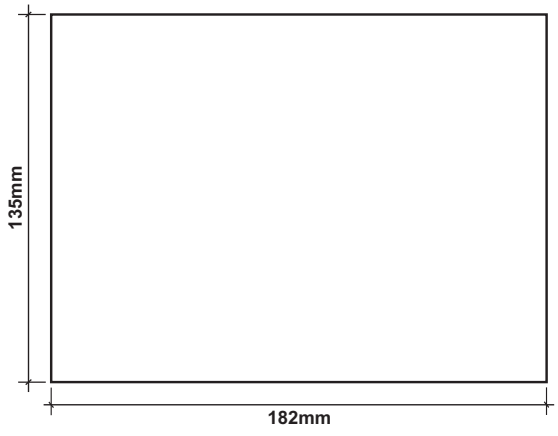

Figure 2.2 Panel Cut-Out

2.3 Electrical Connection

TRANS-ATS.D three phase connections schematic

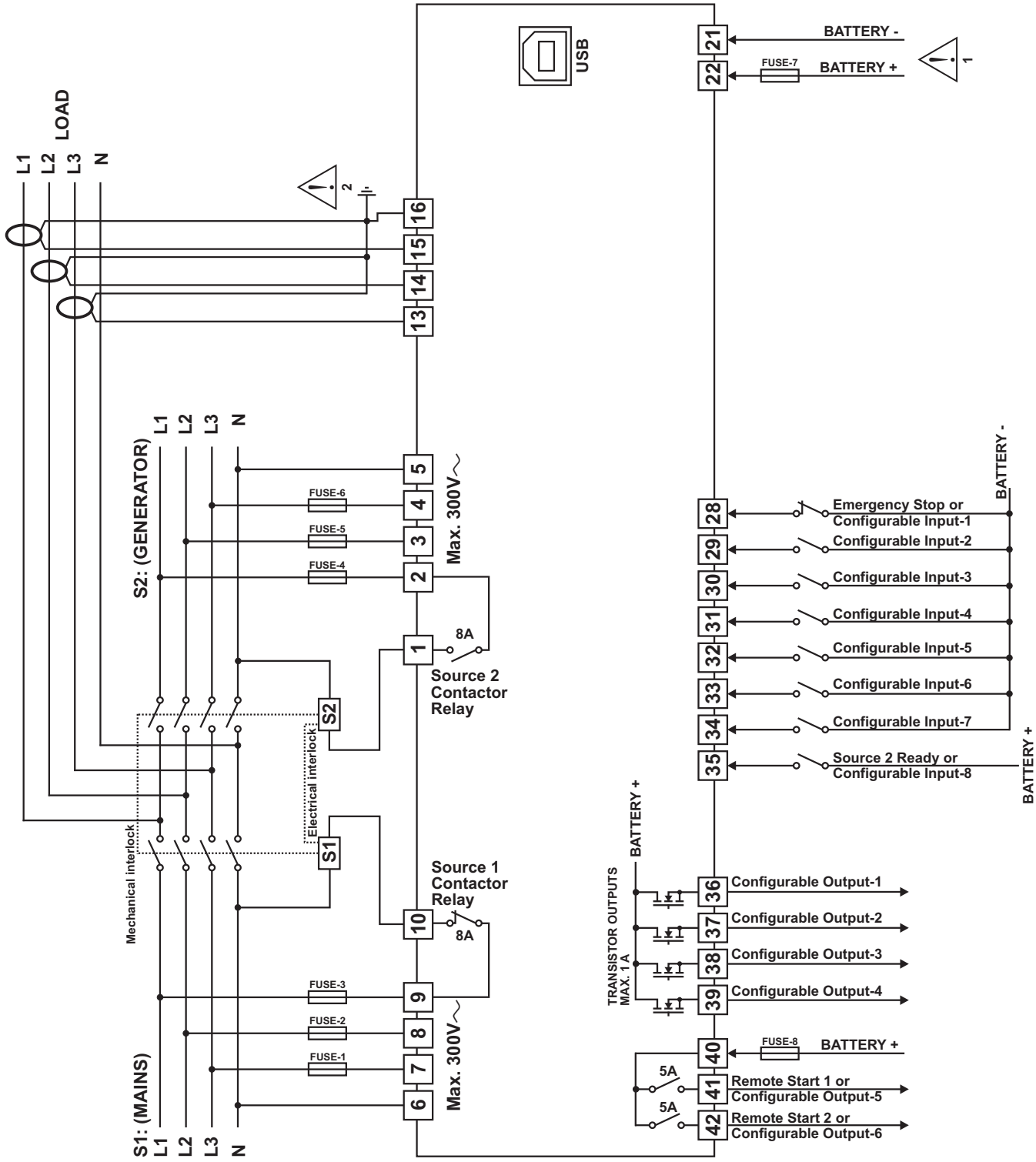

FUSE-1, FUSE-2, FUSE-5, FUSE-6 2A. T
FUSE-7 6A. T
FUSE-8 Max. 10A. T

FUSE-3, FUSE-4 8A. T

1- Connect the unit as shown in the appropriate diagram. Be sure to connect the battery supply the right way round. External fuse is recommended. Stranded cable cross section: 1,5mm², Solid cable cross section: 2,5mm², The stripping length is 7 to 9 mm. Supply cables must comply with the requirements of IEC 60277 or IEC 60245.

2- Current transformers secondary should be grounded. The CT of 5VA is recommended. The unit has a burden of 0.5VA on the CT.

3. Changing And Saving Parameters Values

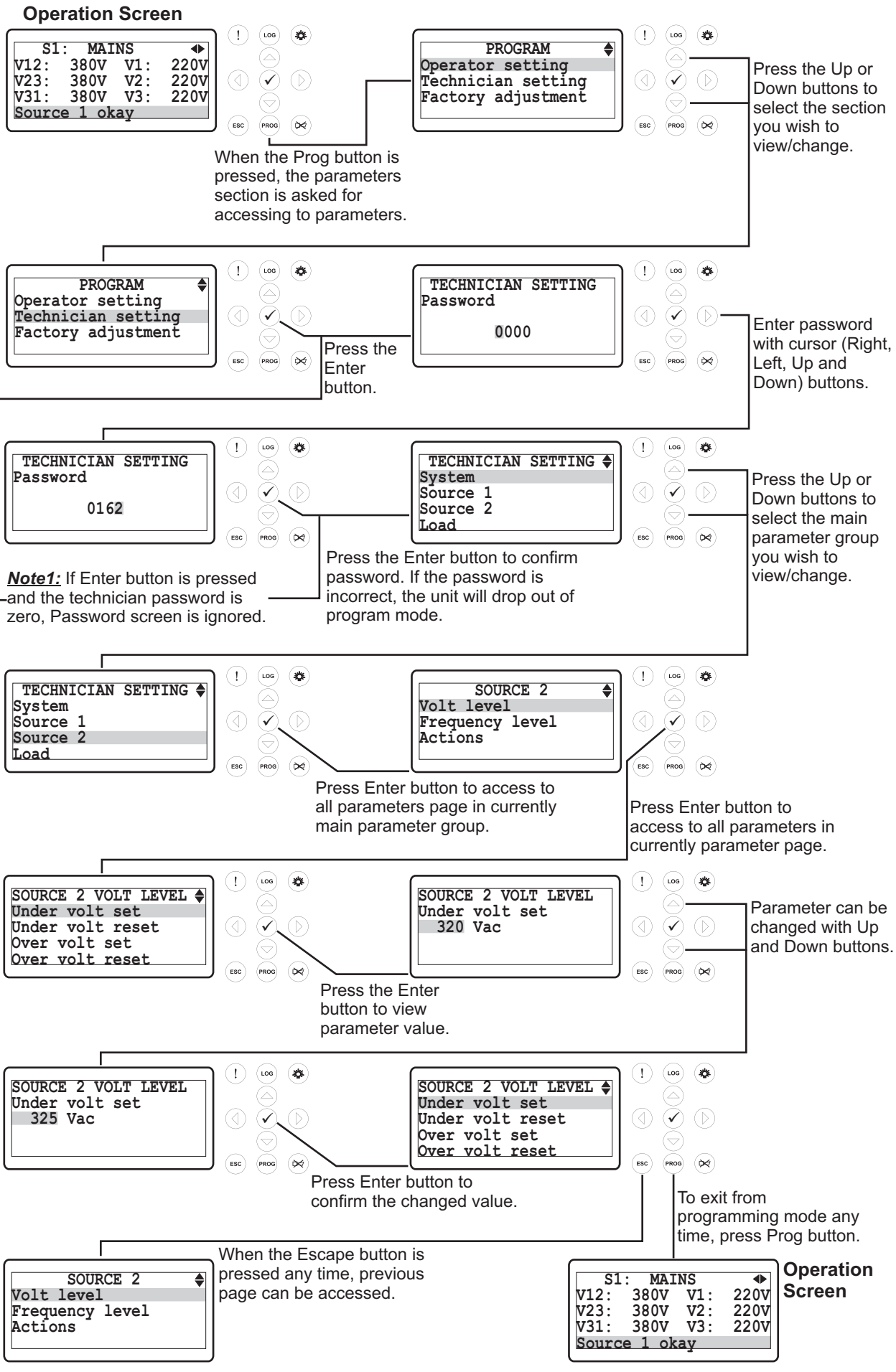

4. Parameters

4.1 Operator Parameters

4.1.1 Source 1 (Mains)

SOURCE 1 VOLT LEVEL (Source 1->*Volt level*)		Min	Max	Default	Unit
Under volt trip	Source 1 Under Voltage	60	600	320	V~
Under volt reset	Source 1 Under Voltage Reset	60	600	340	V~
Over volt trip	Source 1 Over Voltage	60	600	440	V~
Over volt reset	Source 1 Over Voltage Reset	60	600	420	V~

SOURCE 1 FREQ. LEVEL (Source 1->Frequency *level*)		Min	Max	Default	Unit
Under freq trip	Source 1 Under Frequency	20.0	75.0	45.0	Hz
Under freq reset	Source 1 Under Frequency Reset	20.0	75.0	48.0	Hz
Over freq trip	Source 1 Over Frequency	20.0	75.0	55.0	Hz
Over freq reset	Source 1 Over Frequency Reset	20.0	75.0	52.0	Hz

4.1.2 Source 2 (Generator)

SOURCE 2 VOLT LEVEL (Source 2->*Volt level*)		Min	Max	Default	Unit
Under volt trip	Source 2 Under Voltage	60	600	320	V~
Under volt reset	Source 2 Under Voltage Reset	60	600	340	V~
Over volt trip	Source 2 Over Voltage	60	600	440	V~
Over volt reset	Source 2 Over Voltage Reset	60	600	420	V~

SOURCE 2 FREQ. LEVEL (Source 2->Frequency *level*)		Min	Max	Default	Unit
Under freq trip	Source 2 Under Frequency	20.0	75.0	45.0	Hz
Under freq reset	Source 2 Under Frequency Reset	20.0	75.0	48.0	Hz
Over freq trip	Source 2 Over Frequency	20.0	75.0	55.0	Hz
Over freq reset	Source 2 Over Frequency Reset	20.0	75.0	52.0	Hz

Note: dis = disable

4.2 Technician Parameters

4.2.1 System

SYSTEM NETWORK (*System->Network*)		Min	Max	Default	Unit
CT ratio	Current Transformer Ratio	5	9999	100	
PT ratio	Voltage Transformer Ratio	1	100	1	
Type of AC system	Select AC system; 0- 1 Phase 2 Wire 1- 3 Phase 4 Wire 2- 2 Phase 3 Wire L1-L2 3- 2 Phase 3 Wire L1-L3	0	2	1	
Phase sequence	Phase Sequence (dis, L123 or L321)	DISBL, L123, L321		DISBL	
Generator kVA rating	Generator kVA rating set	0	9999	300	kVA

SYSTEM OPTIONS (*System->Options*)		Min	Max	Default	Unit
Source selection *1	Source selection 0-Mains-Gen 1-Gen-Gen 2-Mains-Mains	0	2	0	
Operation type	Operation type 0-Duty - standby 1-Dual	0	1	0	
Source priority	Source priority 0-Source 1 1-Source 2	0	1	0	
Source 1 dual time	Source 1 dual time	0	9999	60	Min.
Source 2 dual time	Source 2 dual time	0	9999	60	Min.
Early start time	Early start time	0	999	10	sec

Note: *1 = The device must be restarted after changing this parameter.

BREAKERS (*System->Breakers*)		Min	Max	Default	Unit
Type of Breaker	Hardware Breaker Selection	0	2	0	
S2 brk.cls.contact	Source 2 Close Breaker Contact Type	NO / NC		0	
S2 brk.cls.relay	Source 2 Close Breaker Relay Type	NOR / PULS		0	
S2 brk.cls.time	Source 2 Close Timer	1	250	5	Sec
S2 brk.open relay	Source 2 Open Breaker Relay Type	NOR / PULS		0	
S2 brk.open time	Source 2 Open Timer	1	250	5	Sec
S1 brk.cls.contact	Source 1 Close Breaker Contact Type	NO / NC		0	
S1 brk.cls.relay	Source 1 Close Breaker Relay Type	NOR / PULS		0	
S1 brk.cls.time	Source 1 Close Timer	1	250	5	Sec
S1 brk.open relay	Source 1 Open Breaker Relay Type	NOR / PULS		0	
S1 brk.open time	Source 1 Open Timer	1	250	5	Sec
Break.close puls.time	Breaker Close Pulse Time	0.0	10.0	0.5	Sec
Break.open pulse time	Breaker Open Pulse Time	0.0	10.0	0.5	Sec
Transfer time	Transfer Time	0	250	2	Sec
Spring loading time	Spring Loading Time	1	250	3	Sec
Retry number	Retry Number	1	250	5	

LCD DISPLAY (*System->LCD display*)		Min	Max	Default	Unit
Language	Language Selection	ENGLISH/CHINESE		ENGLISH	
Contrast	Contrast Setting	4	9	5	
Auto backlight off	Auto Backlight Off	ENABL/DISBL		DISBL	
Auto scroll time	Auto Scroll Time	0 (dis)	250	0	Sec
Auto scroll number	Auto Scroll Number	1	14	5	
Err. mesg scroll time	Scroll Time For Error Messages	1	250	2	Sec

COMMUNICATION (*System->Communication*)		Min	Max	Default	Unit
Slave address	Slave Address	1	247	1	
Baud rate	Baud Rate: 0 - 1200 baud 1 - 2400 baud 2 - 4800 baud 3 - 9600 baud 4 - 19200 baud 5 - 38400 baud	0	5	3	
Parity	Parity: 0-> None, 1-> Odd, 2-> Even	0	2	0	
Stop bit	Stop Bit (0-> 1 stop bit,1-> 2 stop bit)	0	1	0	
Datalog period	Datalog Period	0.0(dis)	999.9	1.0	Min
Timeout	Timeout	0(dis)	999	3	Min
ASCII/RTU selection	ModBus ASCII/RTU Selection	ASCII / RTU		ASCII	

DATE & TIME SET (*System->Date & time set*)		Min	Max	Default	Unit
Year	Year	0	99		
Month	Month	1	12		
Day	Date	1	31		
Week	Day of week	1	7		
Hour	Hour	0	23		
Minute	Minute	0	59		
Second	Second	0	59		

Note: NO / NC : Normally Open / Normally Close
NOR / PULS : Normal / Pulse

DEFAULT SETTINGS (*System->Default settings*)		Min	Max	Default	Unit
Save setting to def.	Save setting to default	YES / NO		NO	
Reset default sets	Reset default sets	YES / NO		NO	
Reset factory sets	Reset factory sets	YES / NO		NO	

PASSWORD SETTINGS (*System->Password settings*)		Min	Max	Default	Unit
Operator password	Operator Password	0	9999	0	
Technician password	Technician Password	0	9999	0	

SYSTEM GENERAL (System->*General*)		Min	Max	Default	Unit
All warning are latch	All Warnings Are Latched En/Dis	ENABL/DISBL		DISBL	

4.2.2 Source 1 (Mains)

SOURCE 1 VOLT LEVEL (Source 1->*Volt level*)		Min	Max	Default	Unit
S1 Under volt trip	Source 1 Under Voltage	60	600	320	V~
S1 Under volt reset	Source 1 Under Voltage Reset	60	600	340	V~
S1 Over volt trip	Source 1 Over Voltage	60	600	440	V~
S1 Over volt reset	Source 1 Over Voltage Reset	60	600	420	V~

SOURCE 1 FREQ. LEVEL (Source 1->Frequency *level*)		Min	Max	Default	Unit
S1 Under freq trip	Source 1 Under Frequency	20.0	75.0	45.0	Hz
S1 Under freq reset	Source 1 Under Frequency Reset	20.0	75.0	48.0	Hz
S1 Over freq trip	Source 1 Over Frequency	20.0	75.0	55.0	Hz
S1 Over freq reset	Source 1 Over Frequency Reset	20.0	75.0	52.0	Hz

SOURCE 1 ACTIONS (Source 1->Actions)		Min	Max	Default	Unit
S1 fail.stop mode	Look Source 1 Failure at Stop Mode En/Dis	ENABL/DISBL		ENABL	
S1 always return delay	Always Look Source 1 Return Delay	ENABL/DISBL		DISBL	
S1 return delay	Source 1 return delay	0	99	2	sec
S1 fail delay	Source 1 fail delay	0	99	2	sec
Immediate MCB open	Immediate MCB Open	ENABL/DISBL		ENABL	

4.2.3 Source 2(Generator)

SOURCE 2 VOLT LEVEL (Source 2->*Volt level*)		Min	Max	Default	Unit
S2 Under volt trip	Source 2 Under Voltage	60	600	320	V~
S2 Under volt reset	Source 2 Under Voltage Reset	60	600	340	V~
S2 Over volt trip	Source 2 Over Voltage	60	600	440	V~
S2 Over volt reset	Source 2 Over Voltage Reset	60	600	420	V~

SOURCE 2 FREQ. LEVEL (Source 2->Frequency *level*)		Min	Max	Default	Unit
S2 Under freq trip	Source 2 Under Frequency	20.0	75.0	45.0	Hz
S2 Under freq reset	Source 2 Under Frequency Reset	20.0	75.0	48.0	Hz
S2 Over freq trip	Source 2 Over Frequency	20.0	75.0	55.0	Hz
S2 Over freq reset	Source 2 Over Frequency Reset	20.0	75.0	52.0	Hz

SOURCE 2 ACTIONS (Source 2->Actions)		Min	Max	Default	Unit
S2 fail.stop mode	Look Source 2 Failure at Stop Mode En/Dis	ENABL/DISBL		ENABL	
S2 always return delay	Always Look Source 2 Return Delay	ENABL/DISBL		DISBL	
S2 return delay	Source 2 return delay	0	99	2	sec
S2 fail delay	Source 2 fail dlelay	0	99	2	sec

4.2.4 Load

LOAD CUR LEVEL & ACT (Load->*Current level & act.*)		Min	Max	Default	Unit
Under cur. set	Load Under Current Set	0	9999	1	A~
Under cur. prealarm	Load Under Current Pre-Alarm	0(dis)	9999	dis	A~
Under cur. reset	Load Under Current Pre-Alarm Reset	0	9999	5	A~
Under cur. act.	Load Under Current Actions 0 - Disable 1 - Warning (Alarm Only, No Shutdown) 2 - Electrical Trip (Alarm/Off Load Generator Followed By Shutdown After Cooling) 3 - Shutdown (Alarm And Shutdown)	0(dis)	3	dis	
Under act. delay time	Load Under Current Actions Delay Time	0	99	2	Sec
Over cur. set	Load Over Current Set	0	9999	9999	A~
Over cur. prealarm	Load Over Current Pre-Alarm	0(dis)	9999	9990	A~
Over cur. reset	Load Over Current Pre-Alarm Reset	0	9999	9980	A~
Over cur. act.	Load Over Current Actions 0 - Disable 1 - Warning (Alarm Only, No Shutdown) 2 - Electrical Trip (Alarm/Off Load Generator Followed By Shutdown After Cooling) 3 - Shutdown (Alarm And Shutdown)	0(dis)	3	dis	
Over act. delay time	Load Over Current Actions Delay Time	0	99	2	Sec
Short circuit cur.	Load Short Circuit Current Set	0	9999	9999	A~

LOAD POWER LEVEL (Load->*Power level*)		Min	Max	Default	Unit
Under power shutdown	Load Under Power Shutdown	0(dis)	9999	dis	kVA
Under power prealarm	Load Under Power Pre-Alarm	0(dis)	9999	dis	kVA
Under power reset	Load Under Power Pre-Alarm Reset	0	9999	5	kVA
Over power shutdown	Load Over Power Shutdown	0(dis)	9999	dis	kVA
Over power prealarm	Load Over Power Pre-Alarm	0(dis)	9999	dis	kVA
Over power reset	Load Over Power Pre-Alarm Reset	0	9999	0	kVA
Shutdown delay time	Load Power Shutdown Delay Time	0	99	2	Sec
Reverse power set	Reverse Power Set	-9999	0	0	kW
Reverse power act.	Reverse Power Actions 0 - Disable 1 - Warning (Alarm Only, No Shutdown) 2 - Electrical Trip (Alarm/Off Load Generator Followed By Shutdown After Cooling) 3 - Shutdown (Alarm And Shutdown)	0(dis)	3	0(dis)	
Rv.pow.act.delay time	Reverse Power Action Delay Time	0	99	2	Sec

Note: dis = disable

4.2.5 Power Supply

ENGINE PLANT BATTERY (*Engine->Plant battery*)		Min	Max	Default	Unit
Under volt	Battery Undervolts Warning	6.0(dis)	30.0	10.0	V⎓
Under volt reset	Battery Undervolts Warning Reset	6.0	30.0	10.5	V⎓
Under volt delay	Battery Undervolts Volts Delay	0.0	9.9	1.0	Sec
Over volt	Battery Overvolts Warning	6.0(dis)	30.0	30.0	V⎓
Over volt reset	Battery Overvolts Warning Reset	6.0	30.0	29.5	V⎓
Over volt delay	Battery Overvolts Delay	0.0	9.9	1.0	Sec

4.2.6 Engine

ENGINE START OPTIONS (*Engine->Starting options*)		Min	Max	Default	Unit
No. of crank attemp	Number Of Start Attempts	1	10	3	
Cranking time	Cranking Time	1	99	5	Sec
Crank rest time	Crank Rest Time	5	99	10	Sec

LOAD TEST (*Engine->Load test*)		Min	Max	Default	Unit
Disable/enable select	Disable, No Load or On Load Selection	0-DISABLE 1-NO LOAD 2-ON LOAD		1-NO LOAD	

EXERCISE (*Engine->Exercise*)		Min	Max	Default	Unit
Time of Period	Generator exercise working period on related day	0(dis)	99	dis	Min
Week	Generator exercise working day of week	1	7	1	
Start time	Generator exercise work start time on related day	0.0	23.59	0.00	H.Min

WORKING CALENDAR (Engine->*Working calendar*)		Min	Max	Default	Unit
Disable/enable select	Working Calendar Disable or Enable	DISBL/ENABL		DISBL	
Start time on monday	Working Calendar Work Start Time on Monday	0.00	23.59	0.00	H.Min
Stop time on monday	Working Calendar Work Stop Time on Monday	0.00	23.59	23.59	H.Min
Start time on tues.	Working Calendar Work Start Time on Tuesday	0.00	23.59	0.00	H.Min
Stop time on tuesday	Working Calendar Work Stop Time on Tuesday	0.00	23.59	23.59	H.Min
Start time on wednes.	Working Calendar Work Start Time on Wednesday	0.00	23.59	0.00	H.Min
Stop time on wednes.	Working Calendar Work Stop Time on Wednesday	0.00	23.59	23.59	H.Min
Start time on thurs.	Working Calendar Work Start Time on Thursday	0.00	23.59	0.00	H.Min
Stop time on thursday	Working Calendar Work Stop Time on Thursday	0.00	23.59	23.59	H.Min
Start time on friday	Working Calendar Work Start Time on Friday	0.00	23.59	0.00	H.Min
Stop time on friday	Working Calendar Work Stop Time on Friday	0.00	23.59	23.59	H.Min
Start time on satur.	Working Calendar Work Start Time on Saturday	0.00	23.59	0.00	H.Min
Stop time on saturday	Working Calendar Work Stop Time on Saturday	0.00	23.59	23.59	H.Min
Start time on sunday	Working Calendar Work Start Time on Sunday	0.00	23.59	0.00	H.Min
Stop time on sunday	Working Calendar Work Stop Time on Sunday	0.00	23.59	23.59	H.Min

ENGINE GENERAL (*Engine->General*)		Min	Max	Default	Unit
Engine running volt	Engine Running Voltage	60(dis)	600	300	V~
Engine running freq.	Engine Running Frequency	25.0	75.0	30.0	Hz
Stop solenoid time	Stop Solenoid Time	1	99	10	Sec

4.2.7 Inputs

CONF. INPUT-X (*Inputs->Conf. input-x*)		Min	Max	Default	Unit
Dis,user conf.or list	0- Disable 1- User Configured 2- Select From List	0(dis)	2	in1=2 in2,3=0 in4, 5=0 in6,7=0 in8=0	
Polarity	0- Normally Open (Close To Activate) 1- Normally Close (Open To Activate)	0	1	in1, 3=1 in2, 4=0 in5, 6=0 in7, 8=0	
Indication	If User Configured 0- Status 1- Warning Non-Latching 2- Warning Latching 3- Electrical Trip 4- Shutdown	0	4	in1=0 in2=0 in3=4 in4=0 in5=0 in6=0 in7=0 in8=0	
Activation	If User Configured 0- Active From Starting 1- Active From Safety On 2- Always Active	0	2	in1, 2=2 in3, 4=2 in5, 6=2 in7, 8=2	
Select from list	If Select From List 0-Remote Start On Load 1-Remote Start Off Load 2-Auxiliary S1 Fail 3-Auxiliary S2 Fail 4-Simulate Horn Reset Button 5-Simulate Alarm Reset Button 6-Simulate Auto Button 7-Simulate Test Button 8-Simulate Manual Button 9-Simulate Start Button 10-Simulate Stop Button 11-S2 Closed Auxiliary 12-S2 Load Inhibit 13-S1 Closed Auxiliary 14-S1 Load Inhibit 15-Auto Restore Inhibit 16-Auto Start Inhibit 17-Panel Lock 18-Scheduled Run Inhibit 19-Reserved 20-Transfer Source 1 To Source 2 21-Transfer Source 2 To Source 1 22-Remote Inhibit 23-Auxiliary S1 Ready 24-Auxiliary S2 Ready 25-Simulate S1 Available 26-Simulate S2 Available 27-Emergency Stop (for only input-1)	0	in1=27 in2=26 in3=26 in4=26 in5=26 in6=26 in7=26 In8=26	In1=27 in2=13 In3=11 in4=19 in5=3 in6=7 In7=23 in8=24	
Active delay	Input active delay	0	250	in1=0 in2, 3, 4=1 in5, 6, 7=1 In8=1	Sec

Note-1 : x = 1(input-1), 2(input-2), 3(input-3), 4(input-4), 5(input-5), 6(input-6), 7(input-7) or 8(input-8)
Note-2 : 25 - Emergency Stop (for only input-1)
Note-3 : dis = disable

CONF. EXP. INPUT-X (*Inputs->Conf. exp. input-x*)		Min	Max	Default	Unit
Dis,user conf.or list	0- Disable 1- User Configured 2- Select From List	0(dis)	2	1	
Hardware type	0-> -Ve (Switched To Battery -) 1-> +Ve (Switched To Battery +)	0	1	0	
Polarity	0- Normally Open (Close To Activate) 1- Normally Close (Open To Activate)	0	1	0	
Indication	If User Configured 0- Status 1- Warning Non-Latching 2- Warning Latching 3- Electrical Trip 4- Shutdown	0	4	0	
Activation	If User Configured 0- Active From Starting 1- Active From Safety On 2- Always Active	0	2	2	
Select from list	If Select From List 2-Auxiliary S1 Fail 3-Auxiliary S2 Fail 4-Simulate Horn Reset Button 5-Simulate Alarm Reset Button 6-Simulate Auto Button 7-Simulate Test Button 8-Simulate Manual Button 9-Simulate Start Button 10-Simulate Stop Button 11-S2 Closed Auxiliary 12-S2 Load Inhibit 13-S1 Closed Auxiliary 14-S1 Load Inhibit 15-Auto Restore Inhibit 16-Auto Start Inhibit 17-Panel Lock 18-Scheduled Run Inhibit 19-Reserved 20-Transfer Source 1 To Source 2 21-Transfer Source 2 To Source 1	2	21	2	
Active delay	Input active delay	0	250	5	Sec

Note-1 : x = 1(exp. input-1), 2(exp. input-2), 3(exp. input-3), 4(exp. input-4), 5(exp. input-5), 6(exp. input-6), 7(exp. input-7) or 8(exp. input-8)

Note-2 : dis = disable

4.2.8 Outputs

CONF. OUTPUT-1 (*Outputs->Conf. output-1*)		Min	Max	Default	Unit
Polarity	0- Normally Open (Close To Activate) 1- Normally Close (Open To Activate)	0	1	0	
Function	0-NOT USED 1-AIR FLAP CONTROL 2-ALARM RESET 3-AUDIBLE ALARM 4-AUTO START INHIBIT 5-AUXILIARY SOURCE 1 FAILURE 6-BATTERY HIGH VOLTAGE 7-BATTERY LOW VOLTAGE 8-CALLING FOR SCHEDULED RUN(EXERCISE) 9-AUXILIARY SOURCE 2 FAILURE 10-RESERVED 11-RESERVED 12-COMMON ALARM 13-COMMON ELECTRICAL TRIP ALARM 14-COMMON SHUTDOWN ALARM 15-COMMON WARNING ALARM 16-RESERVED 17-RESERVED 18-RESERVED 19-SOURCE 1 CRANK RELAY ENERGISED (For generator application) 20-COOLING DOWN TIMER IN PROGRESS 21-SOURCE 2 CRANK RELAY ENERGISED (For generator application) 22-DELAYED ALARM ACTIVE 23-DIGITAL INPUT1 ACTIVE 24-DIGITAL INPUT2 ACTIVE 25-DIGITAL INPUT3 ACTIVE 26-DIGITAL INPUT4 ACTIVE 27-DIGITAL INPUT5 ACTIVE 28-DIGITAL INPUT6 ACTIVE 29-DIGITAL INPUT7 ACTIVE 30-EXPANSION INPUT1 ACTIVE 31-EXPANSION INPUT2 ACTIVE 32-EXPANSION INPUT3 ACTIVE 33-EXPANSION INPUT4 ACTIVE 34-EXPANSION INPUT5 ACTIVE 35-EXPANSION INPUT6 ACTIVE 36-EXPANSION INPUT7 ACTIVE 37-EXPANSION INPUT8 ACTIVE 38-DIGITAL INPUT8 ACTIVE 39-EMERGENCY STOP 40-FAILED TO START SOURCE 2 (For generator application) 41-FAILED TO STOP SOURCE 2(For generator application) 42-FAILED TO START SOURCE 1 (For generator application) 43-FAILED TO STOP SOURCE 1(For generator application) 44-RESERVED 45-SOURCE 2 AT REST(For generator application) 46-SOURCE 2 AVAILABLE 47-SOURCE 2 CLOSED AUXILIARY 48-SOURCE 2 FAIL TO CLOSE 49-SOURCE 2 FAIL TO OPEN 50-SOURCE 2 HIGH FREQUENCY 51-SOURCE 2 FAILURE 52-SOURCE 2 HIGH VOLTAGE 53-RESERVED 54-SOURCE 2 LOAD INHIBIT 55-SOURCE 2 LOW FREQUENCY 56-RESERVED 57-SOURCE 2 LOW VOLTAGE 58-RESERVED 59-SOURCE 2 STOPPING(For generator application) 60-SOURCE 2 OPEN BREAKER 61-HORN OUT LATCHED 62-HORN OUT PULSED 63-LAMP TEST 64-RESERVED 65-SOURCE 1 AVAILABLE 66-SOURCE 1 AT REST (For generator application) 67-SOURCE 1 STOPPING (For generator application) 68-SOURCE 1 CLOSED AUXILIARY 69-SOURCE 1 FAIL TO CLOSE 70-SOURCE 1 FAIL TO OPEN 71-SOURCE 1 FAILURE 72-SOURCE 1 HIGH FREQUENCY 73-SOURCE 1 HIGH VOLTAGE 74-SOURCE 1 LOAD INHIBIT 75-SOURCE 1 LOW FREQUENCY 76-SOURCE 1 LOW VOLTAGE 77-SOURCE 1 OPEN BREAKER 78-SOURCE 2 NO LOADING COMMAND 79-SOURCE 1 NO LOADING COMMAND 80-SOURCE 1 OVER CURRENT PREALARM 81-SOURCE 1 OVER CURRENT 82-SOURCE 1 OVER POWER PREALARM 83-SOURCE 2 OVER CURRENT PREALARM 84-SOURCE 2 OVER CURRENT 85-SOURCE 2 OVER POWER PREALARM 86-SOURCE 2 OVER POWER SHUTDOWN 87-SOURCE 1 OVER POWER SHUTDOWN 88-RESERVED 89-PANEL LOCK 90-RESERVED 91-RESERVED 92-RESERVED 93-REMOTE START SOURCE 1 (For generator application) 94-REMOTE START SOURCE 2 (For generator application) 95-SOURCE 1 SHORT CIRCUIT 96-SOURCE 2 SHORT CIRCUIT 97-RESERVED 98-SOURCE 1 STOP RELAY ENERGISED (For generator application) 99-STARTING ALARM ARMED 100-SOURCE 2 STOP RELAY ENERGISED (For generator application) 101-SYSTEM AUTO MODE 102-SYSTEM MANUAL MODE 103-SYSTEM STOP MODE 104-SYSTEM TEST MODE 105-SOURCE 2 UNDER CURRENT PREALARM 106-SOURCE 2 UNDER CURRENT 107-SOURCE 2 UNDER POWER PREALARM 108-SOURCE 2 UNDER POWER SHUTDOWN 109-RESERVED 110-WAITING FOR SOURCE 1 (For generator application) 111-WAITING FOR SOURCE 2 (For generator application) 112-RESERVED 113-LOAD SUPPLY SOURCE 2 114-LOAD SUPPLY SOURCE 1 115-SOURCE 1 UNDER CURRENT PREALARM 116-SOURCE 1 UNDER CURRENT 117-SOURCE 1 UNDER POWER PREALARM 118-SOURCE 1 UNDER POWER SHUTDOWN 119-RESERVED 120-RESERVED 121-RESERVED 122-REMOTE CONTROL ACTIVE 123-SOURCE 2 REVERSE POWER 124-SOURCE 1 REVERSE POWER 125-RESERVED 126-RESERVED 127-RESERVED 128-RESERVED 129-REMOTE OUTPUT	0	129	71	

CONF. OUTPUT-2 (*Outputs->Conf. output-2*)		Min	Max	Default	Unit
Polarity	0- Normally Open (Close To Activate) 1- Normally Close (Open To Activate)	0	1	0	
Function	The same as Configurable Output-1 options	0	129	51	

CONF. OUTPUT-3 (*Outputs->Conf. output-3*)		Min	Max	Default	Unit
Polarity	0- Normally Open (Close To Activate) 1- Normally Close (Open To Activate)	0	1	0	
Function	The same as Configurable Output-1 options	0	129	62	

CONF. OUTPUT-4 (*Outputs->Conf. output-4*)		Min	Max	Default	Unit
Polarity	0- Normally Open (Close To Activate) 1- Normally Close (Open To Activate)	0	1	0	
Function	The same as Configurable Output-1 options	0	129	12	

CONF. OUTPUT-5 (*Outputs->Conf. output-5*)		Min	Max	Default	Unit
Polarity	0- Normally Open (Close To Activate) 1- Normally Close (Open To Activate)	0	1	0	
Function	The same as Configurable Output-1 options	0	129	93	

CONF. OUTPUT-6 (*Outputs->Conf. output-6*)		Min	Max	Default	Unit
Polarity	0- Normally Open (Close To Activate) 1- Normally Close (Open To Activate)	0	1	0	
Function	The same as Configurable Output-1 options	0	129	94	

CONF. EXP. OUTPUT-1 (*Outputs->Conf. exp. output-1*)		Min	Max	Default	Unit
Polarity	0- Normally Open (Close To Activate) 1- Normally Close (Open To Activate)	0	1	0	
Function	The same as Configurable Output-1 options	0	129	12	

CONF. EXP. OUTPUT-2 (*Outputs->Conf. exp. output-2*)		Min	Max	Default	Unit
Polarity	0- Normally Open (Close To Activate) 1- Normally Close (Open To Activate)	0	1	0	
Function	The same as Configurable Output-1 options	0	129	12	

CONF. EXP. OUTPUT-3 (*Outputs->Conf. exp. output-3*)		Min	Max	Default	Unit
Polarity	0- Normally Open (Close To Activate) 1- Normally Close (Open To Activate)	0	1	0	
Function	The same as Configurable Output-1 options	0	129	12	

CONF. EXP. OUTPUT-4 (*Outputs->Conf. exp. output-4*)		Min	Max	Default	Unit
Polarity	0- Normally Open (Close To Activate) 1- Normally Close (Open To Activate)	0	1	0	
Function	The same as Configurable Output-1 options	0	129	12	

CONF. EXP. OUTPUT-5 (*Outputs->Conf. exp. output-5*)		Min	Max	Default	Unit
Polarity	0- Normally Open (Close To Activate) 1- Normally Close (Open To Activate)	0	1	0	
Function	The same as Configurable Output-1 options	0	129	12	

CONF. EXP. OUTPUT-6 (*Outputs->Conf. exp. output-6*)		Min	Max	Default	Unit
Polarity	0- Normally Open (Close To Activate) 1- Normally Close (Open To Activate)	0	1	0	
Function	The same as Configurable Output-1 options	0	129	12	

CONF. EXP. OUTPUT-7 (*Outputs->Conf. exp. output-7*)		Min	Max	Default	Unit
Polarity	0- Normally Open (Close To Activate) 1- Normally Close (Open To Activate)	0	1	0	
Function	The same as Configurable Output-1 options	0	129	12	

CONF. EXP. OUTPUT-8 (*Outputs->Conf. exp. output-8*)		Min	Max	Default	Unit
Polarity	0- Normally Open (Close To Activate) 1- Normally Close (Open To Activate)	0	1	0	
Function	The same as Configurable Output-1 options	0	129	12	

4.2.9 Timers

START TIMERS (*Timers->Start timers*)		Min	Max	Default	Unit
Generator start dely	Generator Start Delay	0	9999	0	Sec
Remote start delay	Remote Start Delay	0	3600	4	Sec
Generator fail delay	Generator fail delay	0	250	45	Sec
Warming up time	Warmup Time	0	250	5	Sec
Horn duration	Horn Duration	0 (dis)	999	60	Sec

STOPPING TIMERS (*Timers->Stopping timers*)		Min	Max	Default	Unit
Remote stop delay	Remote Stop Delay	0	250	4	Sec
Cooling time	Cooling Time	0 (dis)	3600	60	Sec
Fail to stop delay	Fail To Stop Time	15	999	30	Sec

4.2.10 Expansion Modules

IO (1-8) MODULE (*Expansion modules->IO (1-8)*)		Min	Max	Default	Unit
Disable/enable select	Expansion I/O Module Selection	ENABL/DISBL		DISBL	
CAN fault actions	Can Fault Actions: 0- Disable 1- Warning Non-Latching 2- Warning (Alarm Only, No Shutdown) 3- Electrical Trip (Alarm/Off Load Generator Followed By Shutdown After Cooling) 4- Shutdown (Alarm And Shutdown)	0(dis)	4	0	
CAN fault activation	Can Fault Activation: 0- Active From Starting 1- Active From Safety On 2- Always Active	0	2	0	
CAN fault delay	Can Fault Delay	2	250	10	Sec

DIAL-UP & ETHERNET (*Expansion modules->Dial-up & Ethernet*)		Min	Max	Default	Unit
Disable/enable select	Expansion Dal-up&Ethernet Module Selection	ENABL/DISBL		DISBL	
Call back selection	Call Back Selection	ENABL/DISBL		DISBL	

Note: dis = disable

GPRS MODULE (*Expansion modules->GPRS*)		Min	Max	Default	Unit
Disable/enable select	Expansion GPRS Module Selection	0-DISABLE 1-GPRS SERVER 2-GPRS CLIENT 3-SMS		2-GPRS CLIENT	
Call back selection	Call Back Selection	ENABL/DISBL		DISBL	
Cell inf refresh rate	Cell info refresh rate	0(dis)	999	15	Min
Location data	Location data	ENABL/DISBL		DISBL	
Location warning	Location warning	1(dis)	999	1(dis)	Km

GPRS WEB MODULE (*Expansion modules->GPRS Web)*		Min	Max	Default	Unit
Disable/enable select	GPRS-Web Module Selection	ENABL/DISBL		ENABL	

4.2.11 User Adjustment

SOURCE 1 VOLTAGE OFFSET (*User adjustment->Source 1 voltage offset*)		Min	Max	Default	Unit
Source 1 V1 offset	Source 1 V1 Offset	-20	20	0	V~
Source 1 V2 offset	Source 1 V2 Offset	-20	20	0	V~
Source 1 V3 offset	Source 1 V3 Offset	-20	20	0	V~

SOURCE 2 VOLTAGE OFFSET (*User adjustment->Source 2 voltage offset*)		Min	Max	Default	Unit
Source 2 V1 offset	Source 2 V1 Offset	-20	20	0	V~
Source 2 V2 offset	Source 2 V2 Offset	-20	20	0	V~
Source 2 V3 offset	Source 2 V3 Offset	-20	20	0	V~

CURRENT OFFSET (*User adjustment->Current offset*)		Min	Max	Default	Unit
Current I1 offset	Current I1 Offset	-20	20	0	A~
Current I2 offset	Current I2 Offset	-20	20	0	A~
Current I3 offset	Current I3 Offset	-20	20	0	A~

BATTERY OFFSET (*User adjustment->Battery offset*)		Min	Max	Default	Unit
Batt.volt offset	Battery Voltage Offset	-5.0	5.0	0	V⎓

Error Messages And Explanations:

Battery high warning! : Battery high error
Battery low warning! : Battery low error
Can bus warning! : Can bus error
Emergency stop! : Emergency stop error
Exp.spare-1 alarm! : Expansion module spare 1 error
Exp.spare-2 alarm! : Expansion module spare 2 error
Exp.spare-3 alarm! : Expansion module spare 3 error
Exp.spare-4 alarm! : Expansion module spare 4 error
Exp.spare-5 alarm! : Expansion module spare 5 error
Exp.spare-6 alarm! : Expansion module spare 6 error
Exp.spare-7 alarm! : Expansion module spare 7 error
Exp.spare-8 alarm! : Expansion module spare 8 error
S1 fail to start! : Fail to start alarm for Source 1 (for generator application)
S1 ready! : Source 1 is ready (for generator application)
S1 stop fail! : Source 1 stop error (for generator application)
S2 fail to start! : Fail to start alarm for Source 2 (for generator application)
S2 ready! : Source 2 is ready (for generator application)
S2 stop fail! : Source 2 stop error (for generator application)
S1 Over cur. prealr! : Over current pre-alarm for source 1
S1 Over cur. warn.! : Over current warning for source 1
S1 Over current trip! : Over current error for source 1
S1 Over pow. prealr! : Over power error for source 1
S1 Over power trip! : Over power Error for source 1
S1 Ovr cur.trip cool! : Over current electrical trip for source 1
S1 Rev. power warnng! : Reverse power Warning for source 1
S1 Rev.pow.trip cool! : Reverse power Electrical Trip for source 1
S1 Rever. power trip! : Reverse power Error for source 1
S1 Short cir. trip! : Short circuit error for source 1
S1 Und.cur.trip cool! : Under current electrical trip for source 1
S1 Under cur. prealr! : Under current pre-alarm for source 1
S1 Under cur. trip!: Under Current Error for source 1
S1 Under cur. warnng! : Under Current Warning for source 1
S1 Under pow. prealr! : Under power prealarm for source 1
S1 Under pow. trip! : Under power Error for source 1
S1 break.close fail! : Source 1 breaker not closed alarm
S1 breaker open fail! : Source 1 breaker not opened alarm
S1 over frequency! : Source 1 over frequency
S1 over voltage! : Source 1 over voltage
S1 phase seq.wrong! : Source 1 phase sequence wrong
S1 under frequency! : Source 1 under frequency
S1 under voltage! : Source 1 under voltage
S2 Over cur. prealr! : Over current pre-alarm for source 2
S2 Over cur. warn.! : Over current warning for source 2
S2 Over current trip! : Over current error for source 2
S2 Over pow. prealr! : Over power error for source 2
S2 Over power trip! : Over power Error for source 2
S2 Ovr cur.trip cool! : Over current electrical trip for source 2
S2 Rev. power warnng! : Reverse power Warning for source 2
S2 Rev.pow.trip cool! : Reverse power Electrical Trip for source 2
S2 Rever. power trip! : Reverse power Error for source 2
S2 Short cir. trip! : Short circuit error for source 2
S2 Und.cur.trip cool! : Under current electrical trip for source 2
S2 Under cur. prealr! : Under current pre-alarm for source 2
S2 Under cur. trip!: Under Current Error for source 2
S2 Under cur. warnng! : Under Current Warning for source 2
S2 Under pow. prealr! : Under power prealarm for source 2
S2 Under pow. trip! : Under power Error for source 2
S2 break.close fail! : Source 2 breaker not closed alarm
S2 breaker open fail! : Source 2 breaker not opened alarm
S2 over frequency! : Source 2 over frequency
S2 over voltage! : Source 2 over voltage
S2 phase seq.wrong! : Source 2 phase sequence wrong
S2 under frequency! : Source 2 under frequency
S2 under voltage! : Source 2 under voltage
Source 1 fail! : Source 1 error
Source 2 fail! : Source 2 error
Spare-1 alarm! : Spare 1 error
Spare-2 alarm! : Spare 2 error
Spare-3 alarm! : Spare 3 error
Spare-4 alarm! : Spare 4 error
Spare-5 alarm! : Spare 5 error
Spare-6 alarm! : Spare 6 error
Spare-7 alarm! : Spare 7 error
Spare-8 alarm! : Spare 8 error

Event Messages And Explanations:

Battery high warning : Battery high error
Battery low warning : Battery low error
Can bus warning : Can bus error
Changed mode to auto : Changed mode to auto
Changed mode to man : Changed mode to manual
Changed mode to stop : Changed mode to off
Changed mode to test : Changed mode to test
Emergency stop : Emergency stop error
Exp.spare-1 alarm : Expansion module spare 1 error
Exp.spare-2 alarm : Expansion module spare 2 error
Exp.spare-3 alarm : Expansion module spare 3 error
Exp.spare-4 alarm : Expansion module spare 4 error
Exp.spare-5 alarm : Expansion module spare 5 error
Exp.spare-6 alarm : Expansion module spare 6 error
Exp.spare-7 alarm : Expansion module spare 7 error
Exp.spare-8 alarm : Expansion module spare 8 error
S1 fail to start alrm : Fail to start source 1 (for generator application)
S2 fail to start alrm : Fail to start source 2 (for generator application)
GPRS IP not found : Gprs no IP alarm
GPRS reset fail : Gprs reset fail
S1 stop fail : Source 2 stop error (for generator application)
S2 stop fail : Source 2 stop error (for generator application)
Modem response: error : Gprs error response alarm
No respons.from modem : Gprs no response alarm
S1 Over cur. prealr! : Over current pre-alarm for source 1
S1 Over current alarm : Over current alarm for source 1
S1 Over pow. alarm : Over power error for source 1
S1 Over pow. prealarm : Over power pre-alarm for source 1
S1 Reverse pow. alarm : Reverse power alarm for source 1
S1 Short circuit alrm : Short circuit alarm for source 1
S1 Under cur. alarm : Under current error for source 1
S1 Under cur. prealr : Under current pre-alarm for source 1
S1 Under pow. alarm : Under power error for source 1
S1 Under pow.prealarm : Under power pre-alarm for source 1
S1 break.close fail : Source 1 breaker not closed alarm
S1 breaker open fail : Source 1 breaker not opened alarm
S1 over frequency : Source 1 over frequency
S1 over voltage : Source 1 over voltage
S1 phase seq.wrong : Source 1 phase sequence wrong
S1 under frequency : Source 1 under frequency
S1 under voltage : Source 1 under voltage
S2 Over cur. prealr! : Over current pre-alarm for source 2
S2 Over current alarm : Over current alarm for source 2
S2 Over pow. alarm : Over power error for source 2
S2 Over pow. prealarm : Over power pre-alarm for source 2
S2 Reverse pow. alarm : Reverse power alarm for source 2
S2 Short circuit alrm : Short circuit alarm for source 2
S2 Under cur. alarm : Under current error for source 2
S2 Under cur. prealr : Under current pre-alarm for source 2
S2 Under pow. alarm : Under power error for source 2
S2 Under pow.prealarm : Under power pre-alarm for source 2
S2 break.close fail : Source 2 breaker not closed alarm
S2 breaker open fail : Source 2 breaker not opened alarm
S2 over frequency : Source 2 over frequency
S2 over voltage : Source 2 over voltage
S2 phase seq.wrong : Source 2 phase sequence wrong
S2 under frequency : Source 2 under frequency
S2 under voltage : Source 2 under voltage
SMS was not sent : Sms wasn't sent
SMS was sent : Sms was successfully sent
Source 1 OK : Source 1 OK
Source 1 fail : Source 1 error
Source 2 OK : Source 2 OK
Source 2 fail : Source 1 error
Spare-1 alarm : Spare 1 error
Spare-2 alarm : Spare 2 error
Spare-3 alarm : Spare 3 error
Spare-4 alarm : Spare 4 error
Spare-5 alarm : Spare 5 error
Spare-6 alarm : Spare 6 error
Spare-7 alarm : Spare 7 error
Spare-8 alarm : Spare 8 error

5. Specifications

Equipment use	: Electrical control equipment for generating sets.
Housing & Mounting	: 229 mm x 152 mm x 41 mm. (including connectors). Plastic housing for panel mounting.
Panel Cut-Out	: 182mm x 135mm.
Protection Against Mech. Impacts	: 1Joule (IK06).
Protection Class	: IP65 at front panel.
Weight	: Approximately 0,53 Kg.
Environmental rating	: Standard, indoor at an altitude of less then 2000 meters with non-condensing humidity.
Operating/Storage Temperature	: -20°C to +70°C / -30°C to +80°C
Operating/Storage Humidity	: 95 % max. (non-condensing)
Vibration	: EN 60068-2-6 Ten sweeps in each of three major axes 5Hz to 8Hz @ +/-7.5mm, 8Hz to 500Hz @ 2gn.
Shock	: EN 60068-2-27 Three shocks in each of three major axes 15gn in 11mS.
Installation Over Volt. Category	: II Appliances, portable equipment
Pollution Degree	: II, Normal office or workplace, non conductive pollution
Mode of Operation	: Continuous.
Supply Voltage and Power	: 8 to 32 V⎓ (Peak: 36 V⎓) - 3.2W
Cranking Dropouts	: Battery voltage can be “0” VDC for max. 50 ms during cranking (battery voltage should be at least nominal voltage before cranking).
Battery Voltage Measurement	: 8 to 32 V⎓, accuracy: 1 % FS, resolution: 0,1 V
Source 1 Voltage Measurement	: 10 to 300 VAC Ph-N, 5 to 99.9 Hz. Accuracy: 1 % FS, Resolution: 1 V, Harmonics: Up to 11th.
Source 1 Frequency	: 5 to 99.9Hz (min. 20 VAC Ph-N) Accuracy: 0,25 % FS, Resolution: 0,1 Hz.
Source 2 Voltage Measurement	: 10 to 300 VAC Ph-N, 5 to 99.9 Hz. Accuracy: 1 % FS, Resolution: 1 V, Harmonics: Up to 11th.
Source 2 Frequency	: 5 to 99.9Hz (min. 20 VAC Ph-N) Accuracy: 0,25 % FS, Resolution: 0,1 Hz.
CT secondary	: 5A.
Communication interface	: USB programming and communication port, RS-485 (optional).
Optional Expansion I/O Module	: Expansion I/O module including 8 inputs and 8 outputs.
Optional Comm. Modules	: Ethernet/Dial-up, GSM/GPRS, RS-232/485/422 and GPRS-Web modules.
Relay Outputs	: Source 1 contactor relay output 8A@250V~ Source 2 contactor relay output 8A@250V~ Configurable output-5 5A@250V~ Configurable output-6 5A@250V~
Transistor Outputs	: Configurable output-1 1A at DC supply voltage Configurable output-2 1A at DC supply voltage Configurable output-3 1A at DC supply voltage Configurable output-4 1A at DC supply voltage All transistor ouputs supplied from DC supply terminal 22
Approvals	: CE, UKCA, EAC

6. Other Informations

Manufacturer Information:
Emko Elektronik Sanayi ve Ticaret A.Ş.
Bursa Organize Sanayi Bölgesi, (Fethiye OSB Mah.)
Ali Osman Sönmez Bulvarı 2. Sokak, No:3
16215 Nilüfer - BURSA / TÜRKİYE
Phone : +90 224 261 19 00
Fax : +90 224 261 19 12

Repair and maintenance service information:
Emko Elektronik Sanayi ve Ticaret A.Ş.
Bursa Organize Sanayi Bölgesi, (Fethiye OSB Mah.)
Ali Osman Sönmez Bulvarı 2. Sokak, No:3
16215 Nilüfer - BURSA / TÜRKİYE
Phone : +90 224 261 19 00
Fax : +90 224 261 19 12





https://www.emkoelektronik.com.tr/en/products/trans-ats

EMKO
Your Technology Partner

Thank you very much for your preference to use Emko Elektronik products, please visit our web page to download detailed user manual.

www.emkoelektronik.com.tr

PRC Technologies Corp., Ltd. ลาดพร้าว 101 กรุงเทพ 10240
โทรศัพท์ : 02 530 1714, 02 932 1711 มือถือ : 086 360 8600
อีเมล : contact@prctech.net LINE ID1 : prctec-info, LINE ID2 : @prct