# TRANS-I/O
## INPUT-OUTPUT MODULE

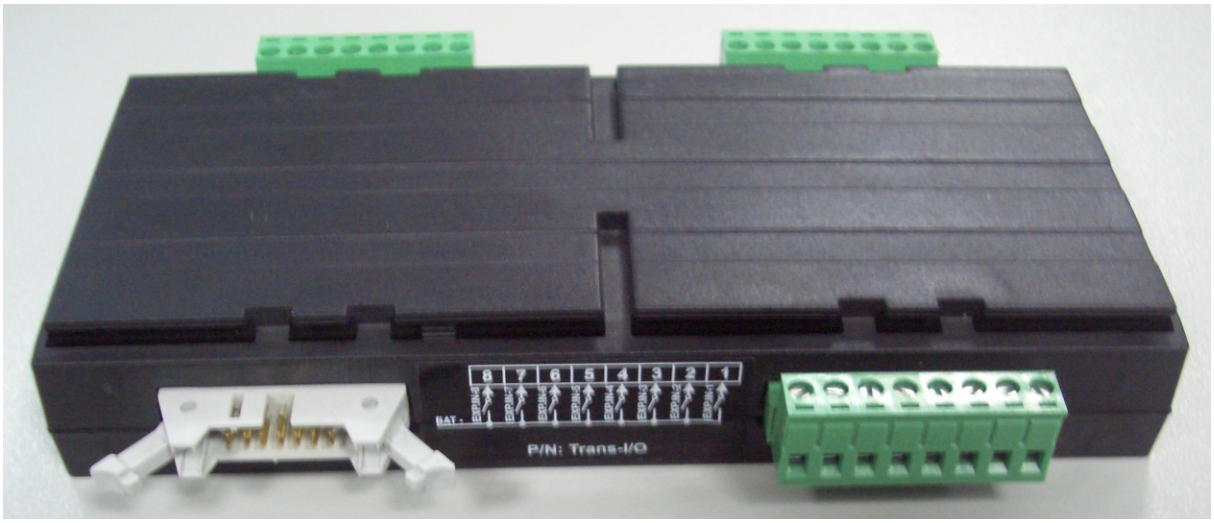


## Description

Trans-I/O input-output module has 8 configurable digital inputs and 8 configurable relay outputs. All the digital inputs can be configured as “+Ve” or “-Ve” by using jumpers on the board. For more information, please see figure-1.

## Configuration

The Expansion Module Selection parameter must be enabled for use with Trans series devices. It means “Program -> Technician setting -> Expansion modules -> IO(1-8) -> Disable/enable select” parameter must be enabled.
After the parameter is set, the device must be re-energized. The expansion inputs and outputs appear in the Expansion Input and Output page.
For more information on configuration and input - output states, please refer to the Trans series device’s manual.

## Specifications

| | |
|---|---|
| **Battery Voltage Measurement** | : 8 - 32 V ⎓. From Trans series device. |
| **Power Consumption** | : 200 mA @12V ⎓. |
| **Dimensions** | : 175 mm x 108 mm x 28 mm. (include connectors). |
| **Weight** | : Approximately 236 gr. |
| **Environmental Rating** | : Standart, indoor at an altitude of less than 2000 meters with non-condensing humidity. |
| **Operating / Storage Temperature** | : 0°C to +70°C / -30°C to +80°C. |
| **Operating / Storage Humidity** | : 90 % max. (non-condensing) |
| **Installation Over Volt. Category** | : II Appliances, portable equipment. |
| **Pollution Degree** | : II, Normal office or workplace, non conductive pollution. |
| **Communication Interface** | : CAN 2.0A (ISO-11898). |
| **Data Transfer Rate** | : 250 Kbps. |
| **Terminating Resistor** | : 120 Ω. (selectable with jumper on board). |



PRC Technologies Corp., Ltd. ลาดพร้าว 101 กรุงเทพ 10240
โทรศัพท์ : 02 530 1714, 02 932 1711 มือถือ : 086 360 8600
อีเมล : contact@prctech.net LINE ID1 : prctec-info, LINE ID2 : @prct

## Electrical Connection

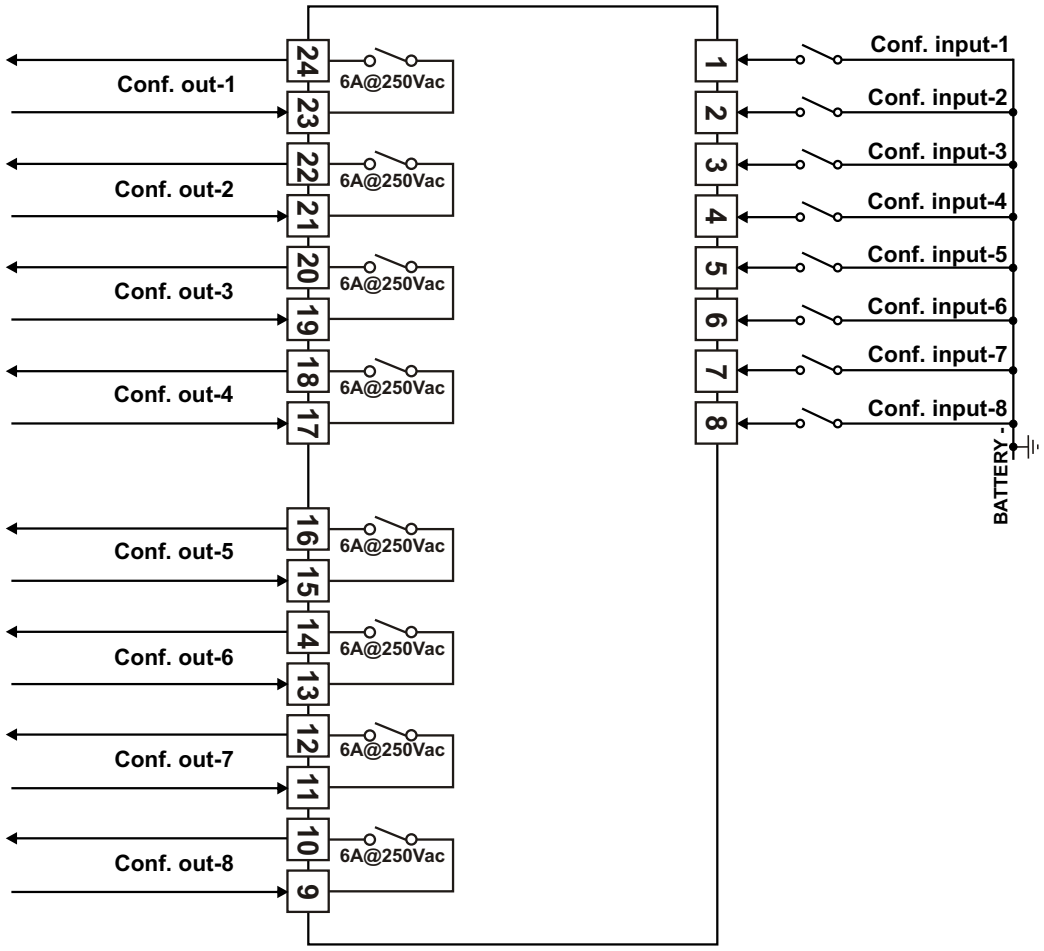


## Figure-1

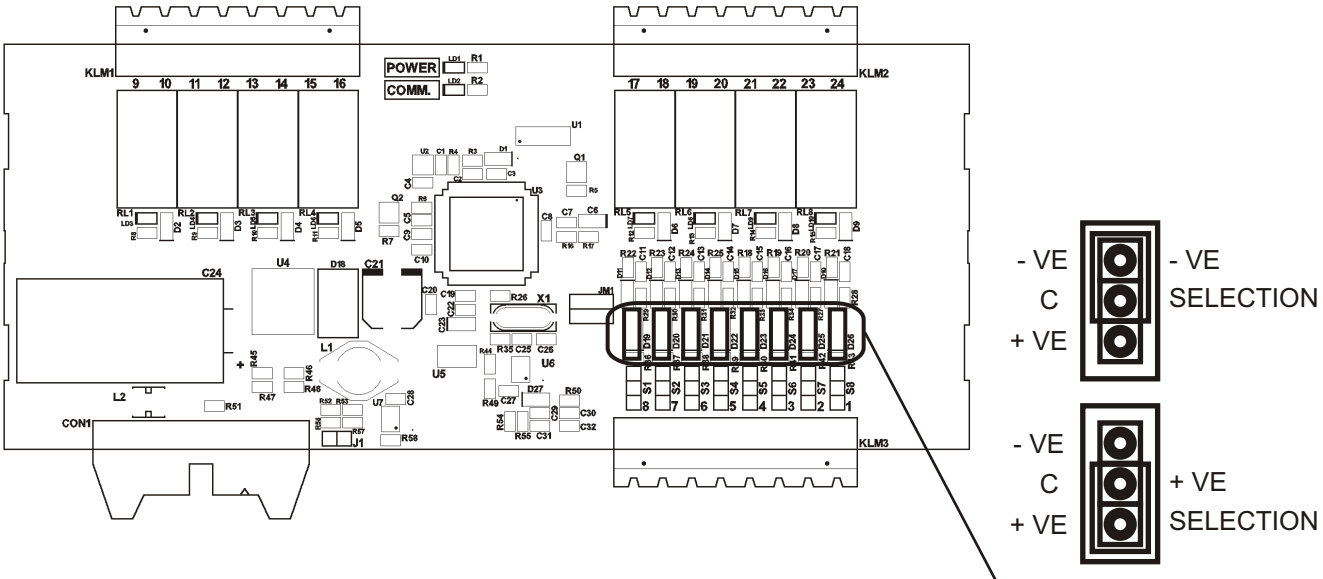


All logical input named as “Expansion configurable inputs” can be configured as “+Ve” or “-Ve” by using these jumpers. Type of the digital inputs must be configured as “+Ve” or “-Ve” at the related parameters of Trans series device (Hardware type parameter in Configurable Expansion Input page). Form of the digital inputs should also be configured as “NO” or “NC” at the related parameters of Trans series device (Polarity parameter in Configurable Expansion Input page).



PRC Technologies Corp., Ltd. ลาดพร้าว 101 กรุงเทพ 10240
โทรศัพท์ : 02 530 1714, 02 932 1711 มือถือ : 086 360 8600
อีเมล : contact@prctech.net LINE ID1 : prctec-info, LINE ID2 : @prct