Manual and Remote Start Unit with Key Switch, 72x72 DIN Size

TRANS-KEY.DISP



TRANS-KEY



CE EAC

Features

Designed For Generator, Pump & Fire Pump Applications
Remote start / stop capability with zero power consumption
Engine start and stop
Automatic shutdown on fault condition
Provides alarm and status information
Alarm and shutdown inputs
Provides charge alternator excitation current
Lamp test function

Fail Monitoring

Oil pressure
Engine temperature
Over voltage & Under voltage (generator application)
Over speed & Under speed (generator application)
Over frequency & Under frequency (generator application)
Under Battery Voltage
Charging alternator
Conf. Input-1 & 2

Controls

Engine fuel or stop solenoid
Starter motor
Load contactor, Choke, Preheat, simulate fuel solenoid, external alarm Horn, alarm out

TRANS-KEY Manual Start Unit uses microprocessor based technology to provide integrated manual start and fault protection in a wide range of engine applications. The module is housed in 72x72 DIN size.The module is used to start and stop the engine, indicating the operational status and fault conditions. User can control the engine via a two position key switch and push buttons mounted on the front panel or with remote input. The module can be programmed from a PC via RS-232 communication port. Measured Generator Voltage, Frequency, Speed, Battery Voltage and Running Hour can be observed on 7-segment display and Display button changes, which measurement result to be displayed(Only available on TRANS-KEY.DISP).

The module has three application feature; 'Generator', 'Pump' or 'Fire Pump' (can be selected from parameter P00).

The module has two feature for fuel. One of them is “energize to run” and the other one is “energize to stop”. User can select the feature from program parameters.

The module protects the engine against fault conditions. If a fault condition occurres, the module indicates the fault condition and shuts-down the engine.

If the key switch is at ‘0’ position, the module has zero power consumption to save the energy. Getting key switch to ‘1’ position, energizes the module. Pre-Heat output (can be selected from parameter P31 and P32) will be active before cranking and stay active during the preheat time (can be set from parameter P22). For only TRANS-KEY unit, if Display button is pressed, Pre-Heat output will stay active as long as Display button is pressed, except that if engine is in running mode.

Press Start button for starting the engine. (if remote start selection parameter (P30) is passive)

Also the module has remote start facility. Please select suitable type of remote start for your application from remote start selection parameter (P30). If the “P30” parameter is selected as ”Enable from Conf. in-2 (Teminal-12)” and remote start input (conf. input-2) is active, the module will start the engine. If the remote start input (conf. input-2) is passive, the unit will stop the engine.

The module will check the alarms after safety on timer is expired.

Under one of these fault conditions the module will stop the engine;

- Over and Under Voltage(generator application),
- Over and Under speed (all applications),
- Over and Under Frequency(generator application),
- High Temperature,
- Low Oil Pressure,
- Shutdown (if one of conf. input selected shutdown and activated).

To reset the fault, turn the key switch to the ‘0’ position for a few seconds.

The Charge Failure is a warning alarm, so the engine continue to work under this failure condition. Also this input supplying charge alternator excitation current.

Shutting down the engine;

If the engine fuel type is “energize to stop”, Stop button must be pressed to stop the engine. After the engine stopped turn the key switch to ‘0’ position.

If the engine fuel type is “energize to run”, press Stop button to stop the engine. After the engine stopped turn the key switch to ‘0’ position. Or you can directly turn the key switch to ‘0’ position without pushing Stop button.

Note 1: Accessing and changing parameters is only available on TRANS-KEY.DISP devices.

Note 2: On the Fire Pump application; If a fault condition occurred, the module will not stop the engine. The engine will be stopped only when the stop button was pressed or the remote stop signal was detected.

Program Parameters for Generator Application

Prog No	Parameter Name	Unit	Limits	Default
P 00	Application Selection (Generator, Pump, Fire Pump)	-	GEn, PUP, FPU	GEn
P 01	Generator Voltage reading enable/disable	-	diS/EnAb	EnAb
P 02	Generator Voltage reading offset (P-N)	Volt	-20 - 20	0
P 03	Generator Voltage Lower Limit	Volt	60 - 600	320
P 04	Generator Voltage Upper Limit	Volt	60 - 600	440
P 05	Generator Frequency reading from generator voltage enable/disable	-	diS/EnAb	EnAb
P 06	Generator Frequency Lower Limit	Hz.	30.0 - 75.0	47.0
P 07	Generator Frequency Upper Limit	Hz.	30.0 - 75.0	53.0
P 08	Sensing Option Pickup En/Dis & Flywheel Teeth	-	0(diS)-1000	0(diS)
P 09	Speed Lower Limit	rpm	500 - 5000	1000
P 10	Speed Upper Limit	rpm	500 - 5000	2000
P 11	Nominal Alternator Frequency	Hz.	30.0 - 75.0	50.0
P 12	Nominal Speed	rpm	500 - 5000	1500
P 13	Battery Voltage Lower Limit	Volt	6.0(diS) - 30.0	8.0
P 14	Stop/Fuel Solenoid Selection	-	StoP/FuEL	FuEL
P 15	Stop Solenoid Energising Time	Sec.	1 - 99	20
P 16	Crank Disconnect on Gen. Speed	rpm	500 - 6000	500
P 17	Crank Disconnect on Gen. Voltage	Volt	60(diS) - 600	300
P 18	Crank Disconnect on Charge Alternator Voltage	-	diS/EnAb	diS
P 19	Crank Disconnect on Oil Pressure 0- Disable 1- Enable (always) 2- Enable (only before start)	-	0= diS 1 - 2	1
P 20	Number of Starting Attempts	-	1 - 10	3
P 21	Starting Attempt Duration	Sec.	5 - 99	5
P 22	Pre-heat time	Sec.	0 - 250	3
P 23	Choke time	Sec.	0.0 - 30.0	0.8
P 24	Oil Pressure Bypass Time	Sec.	0 - 99	30
P 25	Safety On Delay	Sec.	0 - 99	10
P 26	Generator Frequency/rpm Fault Control Delay	Sec.	0.0 - 10.0	1.0
P 27	Generator Voltage Fault Control Delay	Sec.	0.0 - 10.0	1.0
P 28	Engine Running Time Value & New Engine Running Time	Hour	0 - 9999	0
P 29	Fail Safe	-	diS/EnAb	diS
P 30	Remote Start Selection: 0 - Disable. The start / stop buton is used. (leave key switch “1” position) 1 - When the -BATTERY applied to Rem. start input (terminal-12), the engine start cranking. (leave key switch “1” position) 2 - When the +BATTERY applied to +BAT input (terminal-7), the engine start cranking. (leave key switch “1” position)	-	0(diS) - 2	diS
P 31	Conf. Out-1 Type: 0- Alarm Out 1- Horn Out 2- Preheat Out 3- Simulate Fuel Solenoid Out 4- Choke Active 5- Load Conactor Out	-	0 - 5	0
P 32	Conf. Out-2 Type: 0- Alarm Out, 1- Horn Out, 2- Preheat Out 3- Simulate Fuel Solenoid Out 4- Choke Active 5- Load Conactor Out	-	0 - 5	0
P 33	Conf. Input 1 0 - Disable 1 - Only horn temporary, observation continuously 2 - Only horn permanent, observation continuously 3 - Engine stop, observation continuously 4 - Only horn temporary, observation while engine running 5 - Only horn permanent, observation while engine running 6 - Engine stop, observation while engine running	-	0 - 6	0
P 34	Conf. Input 2 0 - Disable 1 - Only horn temporary, observation continuously 2 - Only horn permanent, observation continuously 3 - Engine stop, observation continuously 4 - Only horn temporary, observation while engine running 5 - Only horn permanent, observation while engine running 6 - Engine stop, observation while engine running	-	0 - 6	0
P 35	Oil sensor selection (0 - Oil level , 1 - Oil pres)	-	0 - 1	1
P 36	Horn Duration	Sec.	0= Cont. 1 - 999	30
P 37	Cooling Time	Sec.	0(diS) - 3600	0
P 38	Phase select	-	1 PH /3 PH	3 PH
P 39	Horn prior to start	-	diS/EnAb	diS
P PS	Password	-	0 - 9999	0

Not1: diS: Disable EnAb: Enable GEn: Generator PUP: Pump FPU: Fire Pump PH: Phase

⚠ Warning: P30 Remote Start Selection parameter option ‘2’ can not be used with stop solenoid type generators.

PRC Technologies Corp., Ltd. ลาดพร้าว 101 กรุงเทพ 10240

โทรศัพท์ : 02 530 1714, 02 932 1711 มือถือ : 086 360 8600

อีเมล : contact@prctech.net LINE ID1 : prctec-info, LINE ID2 : @prct

Program Parameters for Pump (Fire Pump) Applications

Prog No	Parameter Name	Unit	Limits	Default
P 00	Application Selection (Generator, Pump, Fire Pump)	-	GEn, PUP, FPU	GEn
P 08	Sensing Option Pickup En/Dis & Flywheel Teeth	-	0(diS)-1000	0(diS)
P 09	Speed Lower Limit	rpm	500 - 5000	1000
P 10	Speed Upper Limit	rpm	500 - 5000	2000
P 13	Battery Voltage Lower Limit	V	6.0(diS) - 30.0	8.0
P 14	Stop/Fuel Solenoid Selection	-	StoP/FuEL	FuEL
P 15	Stop Solenoid Energising Time	Sec.	1 - 99	20
P 16	Crank Disconnect on Gen. Speed	rpm	500 - 6000	500
P 18	Crank Disconnect on Charge Alternator Voltage	-	diS/EnAb	diS
P 19	Crank Disconnect on Oil Pressure 0- Disable 1- Enable (always) 2- Enable (only before start)	-	0= diS 1 - 2	1
P 20	Number of Starting Attempts	-	1 - 10	3
P 21	Starting Attempt Duration	Sec.	5 - 99	5
P 22	Pre-heat time	Sec.	0 - 250	3
P 23	Choke time	Sec.	0.0 - 30.0	0.8
P 24	Oil Pressure Bypass Time	Sec.	0 - 99	30
P 25	Safety On Delay	Sec.	0 - 99	10
P 26	Frequency/rpm Fault Control Delay	Sec.	0.0 - 10.0	1.0
P 28	Engine Running Time Value & New Engine Running Time	Hour	0 - 9999	0
P 29	Fail Safe	-	diS/EnAb	diS
P 30	Remote Start Selection 0 - Disable. The start / stop buton is used. (leave key switch “1” position) 1 - When the -BATTERY applied to Rem. start input (terminal-12), the engine start cranking. (leave key switch “1” position) 2 - When the +BATTERY applied to +BAT input (terminal-7), the engine start cranking. (leave key switch “1” position)	-	0(diS) - 2	diS
P 31	Conf. Out-1 Type 0- Alarm Out, 1- Horn Out, 2- Preheat Out 3- Simulate Fuel Solenoid Out 4- Choke Active 5- Load Conactor Out	-	0 - 5	0
P 32	Conf. Out-2 Type 0- Alarm Out, 1- Horn Out, 2- Preheat Out 3- Simulate Fuel Solenoid Out 4- Choke Active 5- Load Conactor Out	-	0 - 5	0
P 33	Conf. Input 1 0 - Disable 1 - Only horn temporary, observation continuously 2 - Only horn permanent, observation continuously 3 - Engine stop, observation continuously 4 - Only horn temporary, observation while engine running 5 - Only horn permanent, observation while engine running 6 - Engine stop, observation while engine running	-	0 - 6	0
P 34	Conf. Input 2 0 - Disable 1 - Only horn temporary, observation continuously 2 - Only horn permanent, observation continuously 3 - Engine stop, observation continuously 4 - Only horn temporary, observation while engine running 5 - Only horn permanent, observation while engine running 6 - Engine stop, observation while engine running	-	0 - 6	0
P 35	Oil sensor selection (0 - Oil level , 1 - Oil pres)	-	0 - 1	1
P 36	Horn Duration	Sec.	0= Cont. 1 - 999	30
P 37	Cooling Time	Sec.	0(dis) - 3600	0
P 39	Horn prior to start	-	diS/EnAb	diS
P PS	Password	-	0 - 9999	0

Not1: diS: Disable EnAb: Enable GEn: Generator PUP: Pump FPU: Fire Pump

Specifications

Equipment Use	Electrical control equipment for generating sets
Housing & Mounting	72 mm x 72 mm x 52 mm
Panel Cut-out	68 mm x 68 mm
Protection	NEMA4X (IP30 at front panel, IP20 at rear side)
Weight	Approximately 210 gr
Environmental Rating	Standard, indoor at an altitude of less then 2000 meters with non-condensing humidity
Operating / Storage Temperature	-25ºC to +70ºC / -40ºC to +85ºC
Operating / Storage Humidity	90% max. (Non-condensing)
Installation Over Voltage Cat.	II appliances, portable equipment
Pollution Degree	II, Normal office or workplace, non-conductive pollution
Mode of Operation	Continuous
EMC	EN-61000-6-4, EMC generic emission standard for industrial equipment EN-61000-6-2, EMC generic immunity standard for industrial equipment
Electrical Safety	EN-61010-1, safety requirements for electrical equipment for measurement, control and laboratory use
Supply Voltage(⎓)	8 - 32 V⎓
Generator Speed Measurement	35 to 10000 Hz (4 to 35 volts peak continuously).Accuracy: 0,25 % FS.
Generator Frequency Measur.	15,6 to 99,9 Hz (15 to 300 V∿L-N) Accuracy: 0,5 % FS,Resolution: 0,1 Hz.
Generator Voltage Measurement	3 to 300 V∿ L-N, 5 to 99.9 Hz. Accuracy: 1 % FS, Resolution: 1 V.
Cranking Dropouts	Battery voltage can be 0V⎓ for max. 100msn during cranking (battery voltage should be at least nominal voltage before cranking)
Transistor Outputs	Fuel 1A at DC supply voltage Start 1A at DC supply voltage Configurable Out - 1 1A at DC supply voltage Configurable Out - 2 1A at DC supply voltage All transistor outputs supplied from DC supply terminal 6
Failure Indicators	Failed to engine start High engine temperature Low oil pressure Generator Voltage Failure Frequency/speed failure Battery charge failure / Battery Voltage Failure General failure
Status Indicators	Engine start Engine stop Pre-heat
Approvals	EAC , CE

Dimensions & Front View of TRANS-KEY.DISP

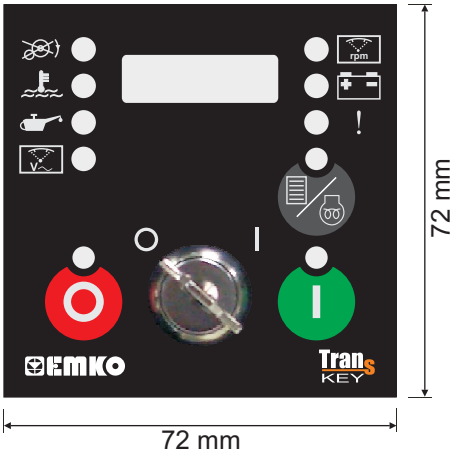

Dimensions & Front View of TRANS-KEY

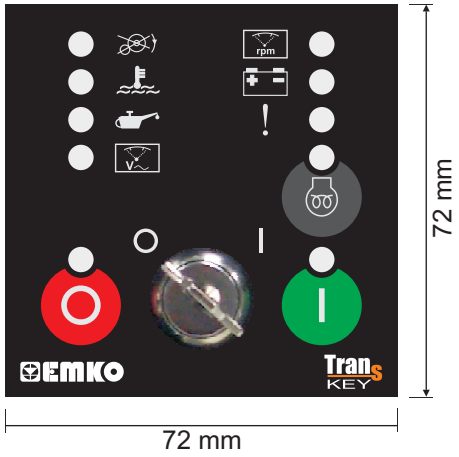

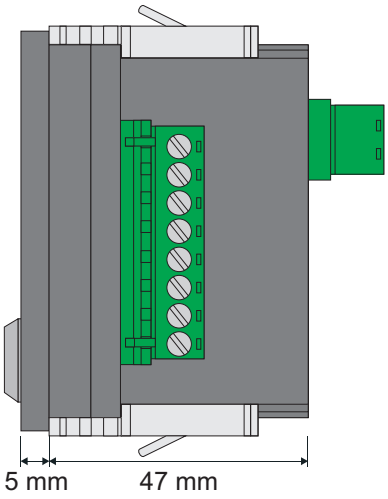

Panel Cut-Out

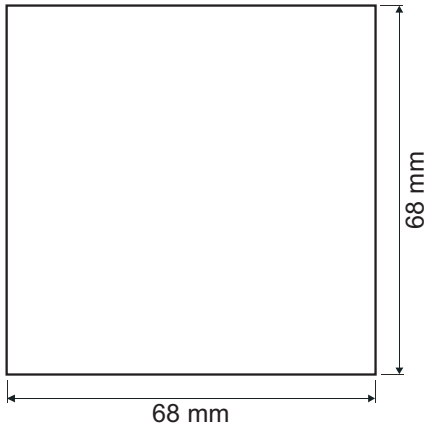

Terminal Connections

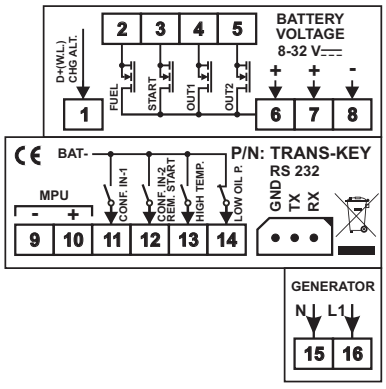

Connection Schematic (Without Remote Start P30 = 0 (dis))

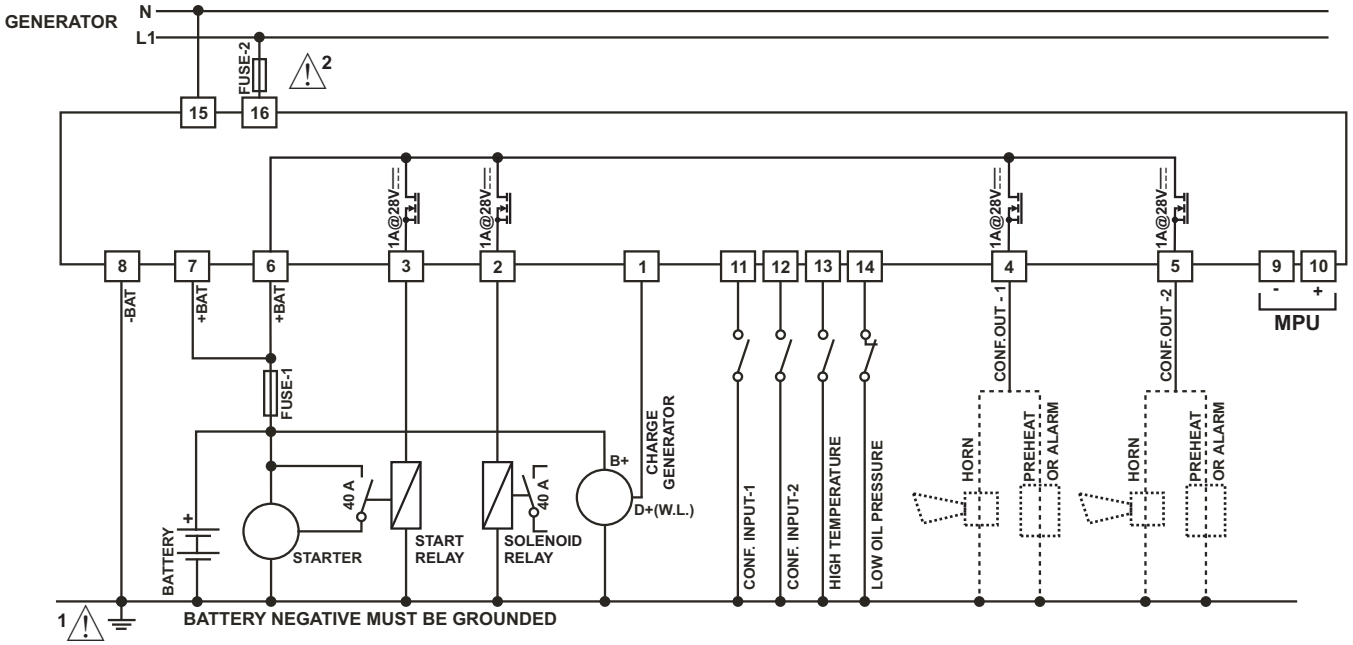

The fuses should be as follows:

FUSE-1	According to current required by solenoids (Max. 5A. T)
FUSE-2	Max. 1A. T

1- Connect the unit as shown in the appropriate diagram above. Be sure to connect the battery supply the right way round and battery negative should be grounded.
2- Use Generator connection only generator application (P00 = Gen)

Connection Schematic (With Remote Signal P30 = 1)

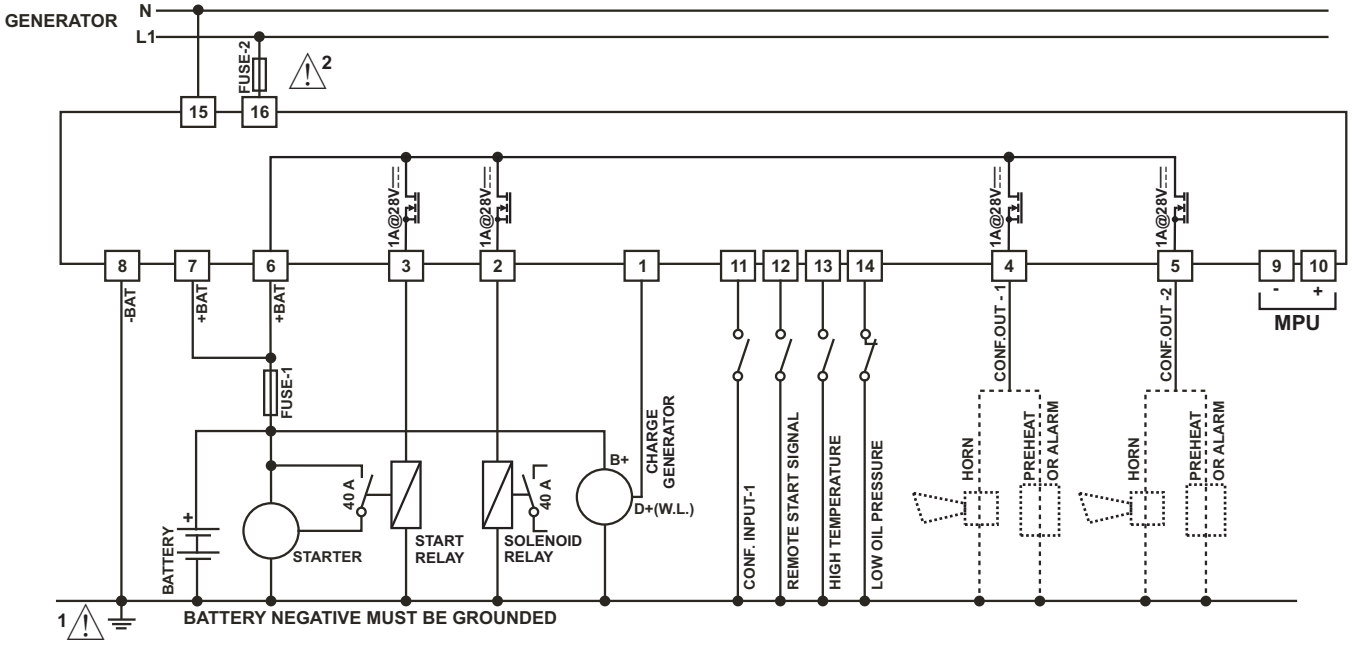

The fuses should be as follows:

FUSE-1	According to current required by solenoids (Max. 5A. T)
FUSE-2	Max. 1A. T

1- Connect the unit as shown in the appropriate diagram above. Be sure to connect the battery supply the right way round and battery negative should be grounded.
2- Use Generator connection only generator application (P00 = Gen)

Connection Schematic (With Remote Start, No Power Consumption P30 = 2)

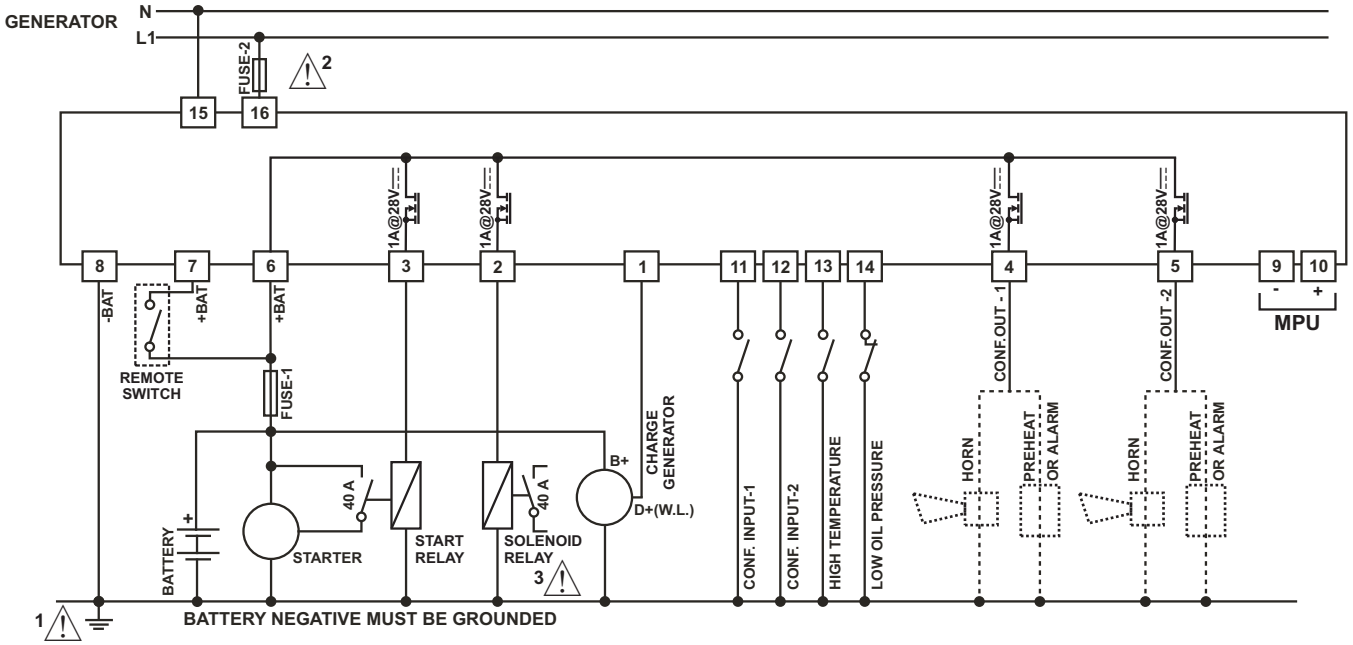

The fuses should be as follows:

FUSE-1	According to current required by solenoids (Max. 5A. T)
FUSE-2	Max. 1A. T

1- Connect the unit as shown in the appropriate diagram above. Be sure to connect the battery supply the right way round and battery negative should be grounded.
2- Use Generator connection only generator application (P00 = Gen)
3- Can not be used with stop solenoid type generators.

Connection Schematic (For Fail Safe P29 = 1)

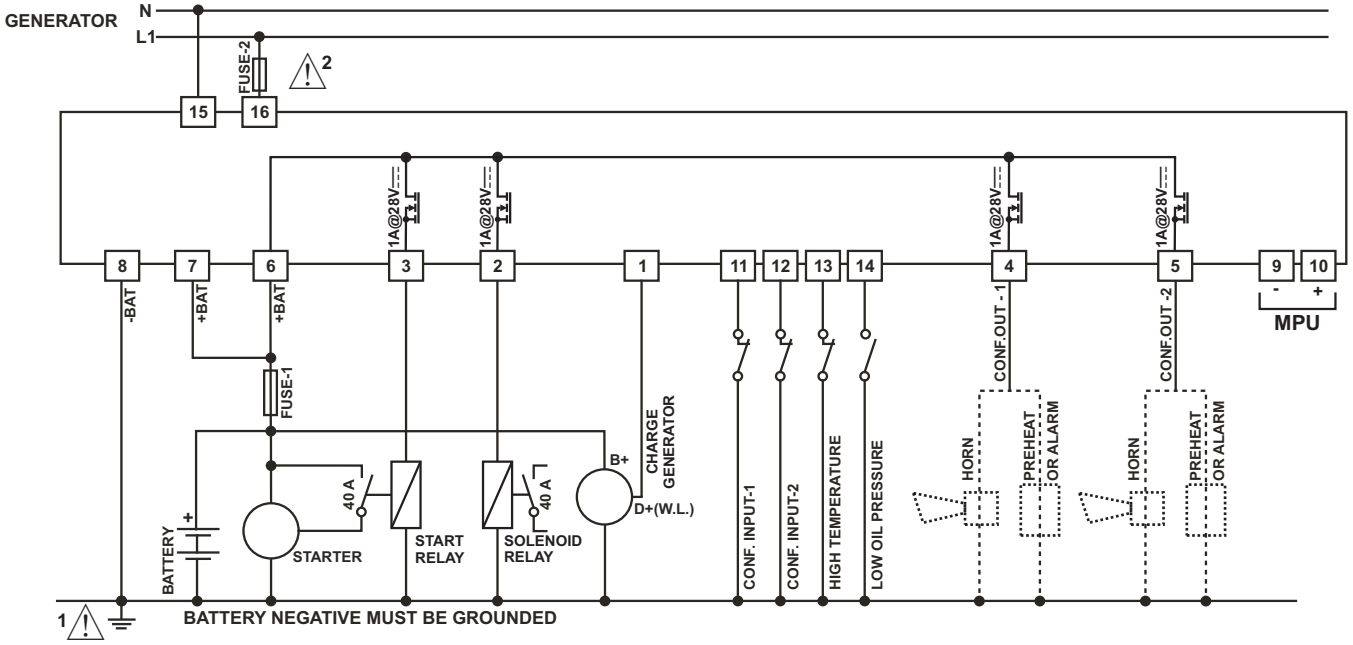

The fuses should be as follows:

FUSE-1	According to current required by solenoids (Max. 5A. T)
FUSE-2	Max. 1A. T

1- Connect the unit as shown in the appropriate diagram above. Be sure to connect the battery supply the right way round and battery negative should be grounded.
2- Use Generator connection only generator application (P00 = Gen)

Easy Access diagram of Program Parameters
(Accessing and changing parameters is only available on TRANS-KEY.DISP devices)

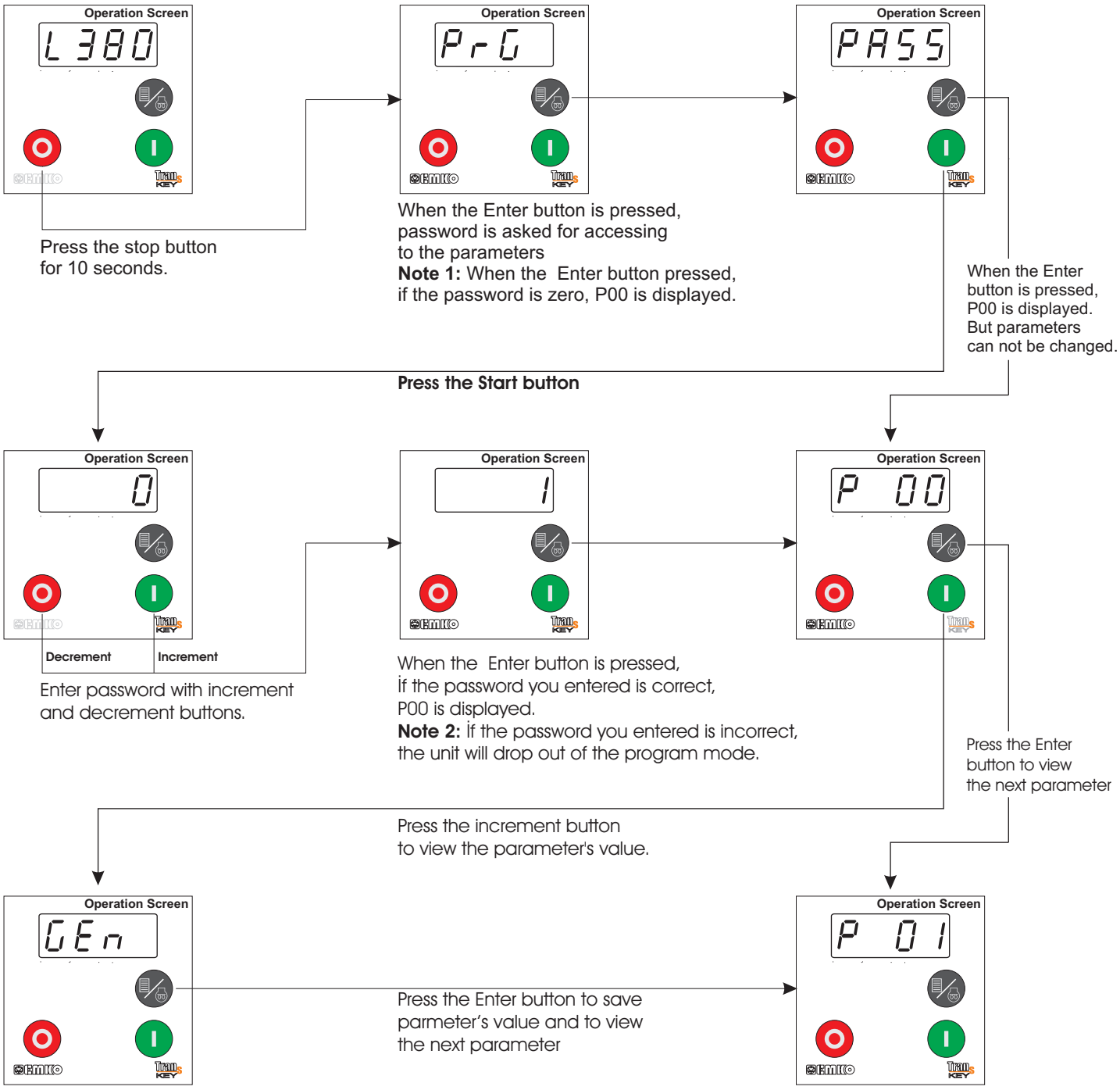

Product Codes

TRANS-KEY	Manual and Remote Start Unit with Key Switch, 72x72 DIN Size, with transistor outputs
TRANS-KEY.DISP	Manual and Remote Start Unit with Key Switch with display, 72x72 DIN Size, with transistor outputs

Other Informations

Manufacturer Information:
Emko Elektronik Sanayi ve Ticaret A.Ş.
Bursa Organize Sanayi Bölgesi, (Fethiye OSB Mah.)
Ali Osman Sönmez Bulvarı 2. Sokak, No:3
16215 Nilüfer - BURSA / TÜRKİYE
Phone : +90 224 261 19 00
Fax : +90 224 261 19 12

Repair and maintenance service information:
Emko Elektronik Sanayi ve Ticaret A.Ş.
Bursa Organize Sanayi Bölgesi, (Fethiye OSB Mah.)
Ali Osman Sönmez Bulvarı 2. Sokak, No:3
16215 Nilüfer - BURSA / TÜRKİYE
Phone : +90 224 261 19 00
Fax : +90 224 261 19 12

Your Technology Partner

Thank you very much for your preference to use Emko Elektronik Products.

www.emkoelektronik.com.tr

PC Software

https://www.emkoelektronik.com.tr/en/products/trans-key

PC Software

https://www.emkoelektronik.com.tr/en/products/trans-keydisp

PRC Technologies Corp., Ltd. ลาดพร้าว 101 กรุงเทพ 10240

โทรศัพท์ : 02 530 1714, 02 932 1711 มือถือ : 086 360 8600

อีเมล : contact@prctech.net LINE ID1 : prctec-info, LINE ID2 : @prct