

TRANS-MINIAMF

AUTOMATIC MAINS FAILURE UNIT

1.Introduction

1.1 General Specifications

The unit provides for automatic transfer of a load from mains to generator in the event of a mains failure. Intended for unattended operation, it is able to detect failure of any phase of the mains and to start and switch over to a generator if the mains voltage goes outside pre-set limits. Both automatic and manual control is possible. A test mode is also available which allows the generator to be run without taking the load.

The unit calculates engine RPM from Magnetic Pickup sensor input (Trans-MiniAMF.MPU devices only) and/or generator voltage signal. At Trans-MiniAMF.CAN devices, unit gets engine RPM information from J1939 ECU.

The unit monitors J1939 ECU messages and provides remote start/stop control via J1939 protocol at only Trans-MiniAMF.CAN devices (supported ECUs: Volvo EMS2, Volvo EDC4, Perkins, Scania S6, MAN MFR and standard messages).

In the event that the engine fails to start on the first attempt, the attempt will be repeated a programmed number of times or until successful.

The unit monitors generator operation and gives warning of any faults that are detected.
If a fault is detected, the unit shuts down the engine and shows the failure message on the LCD display.

1.2 Warranty

EMKO Elektronik warrants that the equipment delivered is free from defects in material and workmanship. This warranty is provided for a period of two years. The warranty period starts from the delivery date. This warranty is in force if duty and responsibilities which are determined in warranty document and instruction manual performs by the customer completely.

1.3 Maintenance

Repairs should only be performed by trained and specialized personnel. Cut power to the device before accessing internal parts.
Do not clean the case with hydrocarbon-based solvents (Petrol, Trichlorethylene etc.). Use of these solvents can reduce the mechanical reliability of the device. Use a cloth dampened in ethyl alcohol or water to clean the external plastic case.

2. Installation

Before beginning installation of this product, please read the instruction manual and warnings below carefully.

A visual inspection of this product for possible damage occured during shipment is recommended before installation. It is your responsibility to ensure that qualified mechanical and electrical technicians install this product.

If there is danger of serious accident resulting from a failure or defect in this unit , power off the system and seperate the electrical connection of the device from the system.

Keep the power off until all of the wiring is completed so that electric shock and trouble with the unit can be prevented.

2.1 Unit Configuration

The unit can be programmed using the buttons and LCD display on the front panel or PC Software.

2.2 Panel Mounting

The unit is designed for panel mounting. Fixing is by two screw fixings.
1- Insert the unit in the panel cut-out from the front.
2- Insert the fixings in the slotted at the corners of the unit and tighten the fixing screws to secure the unit against the panel.

During the equipment is putted in hole on the metal panel while mechanical installation some metal burrs can cause injury on hands, you must be careful.

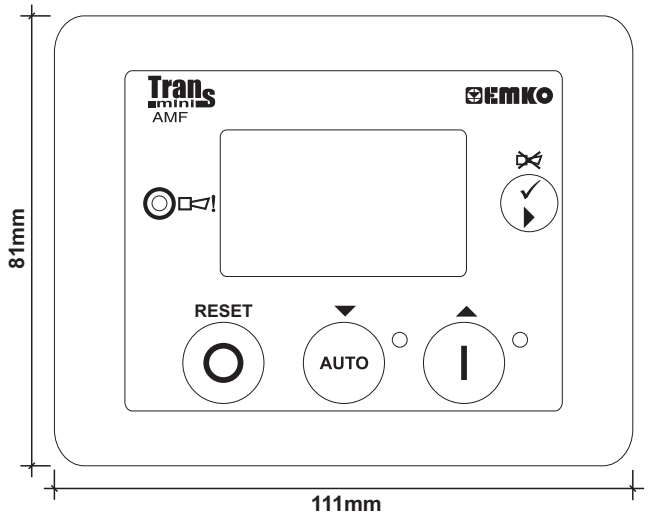

Figure 2.1 Front View

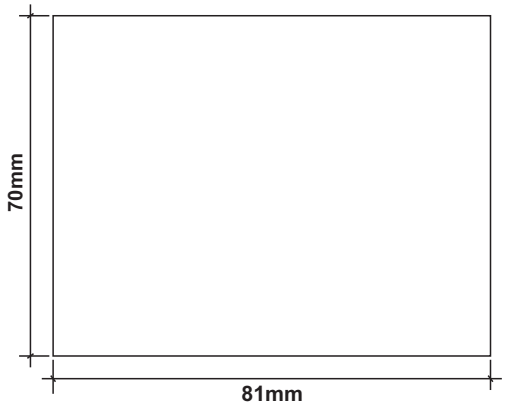

Figure 2.2 Panel Cut-Out

2.3 Electrical Connection

TRANS-MINIAMF three phase connections schematic

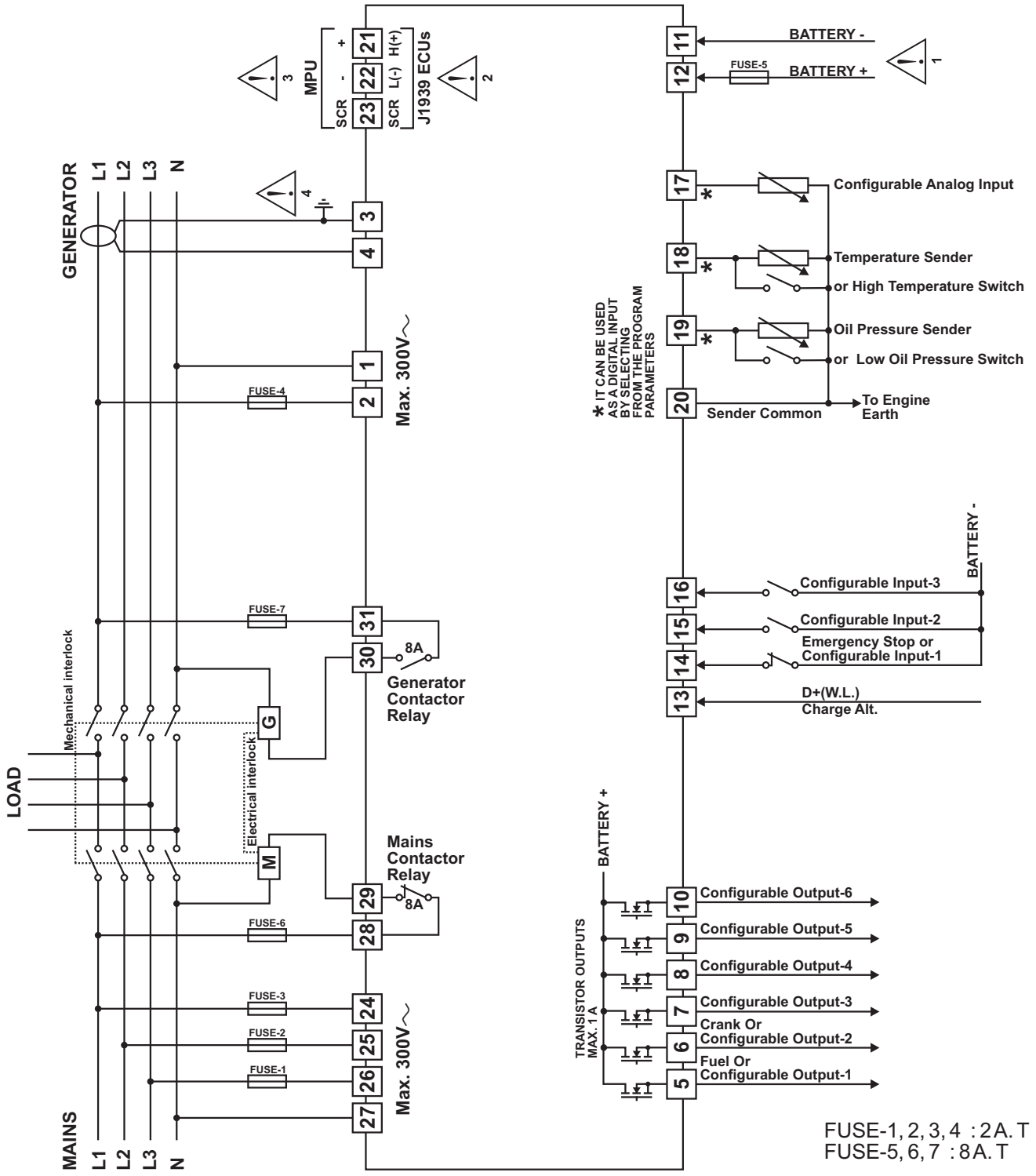

1- Connect the unit as shown in the appropriate diagram. Be sure to connect the battery supply the right way round and battery negative should be grounded. External fuse is recommended. Stranded cable cross section: 1,5mm², Solid cable cross section: 2,5mm², The stripping length is 7 to 9 mm. Supply cables must comply with the requirements of IEC 60277 or IEC 60245.

2- The CAN interface requires that a 120 Ohms terminator is fitted to each end of the communications link. This termination resistor is fitted internally into the unit. So it is not required externally. Screened cable must be used for connecting the CAN, ensuring that the screen is grounded at one end ONLY.

3- Screened cable must be used for connecting the Magnetic Pickup, ensuring that the screen is grounded at one end ONLY.

4- Current transformers secondary should be grounded. The CT of 5VA is recommended. The unit has a burden of 0.5VA on the CT.

3. Changing And Saving Parameters Values

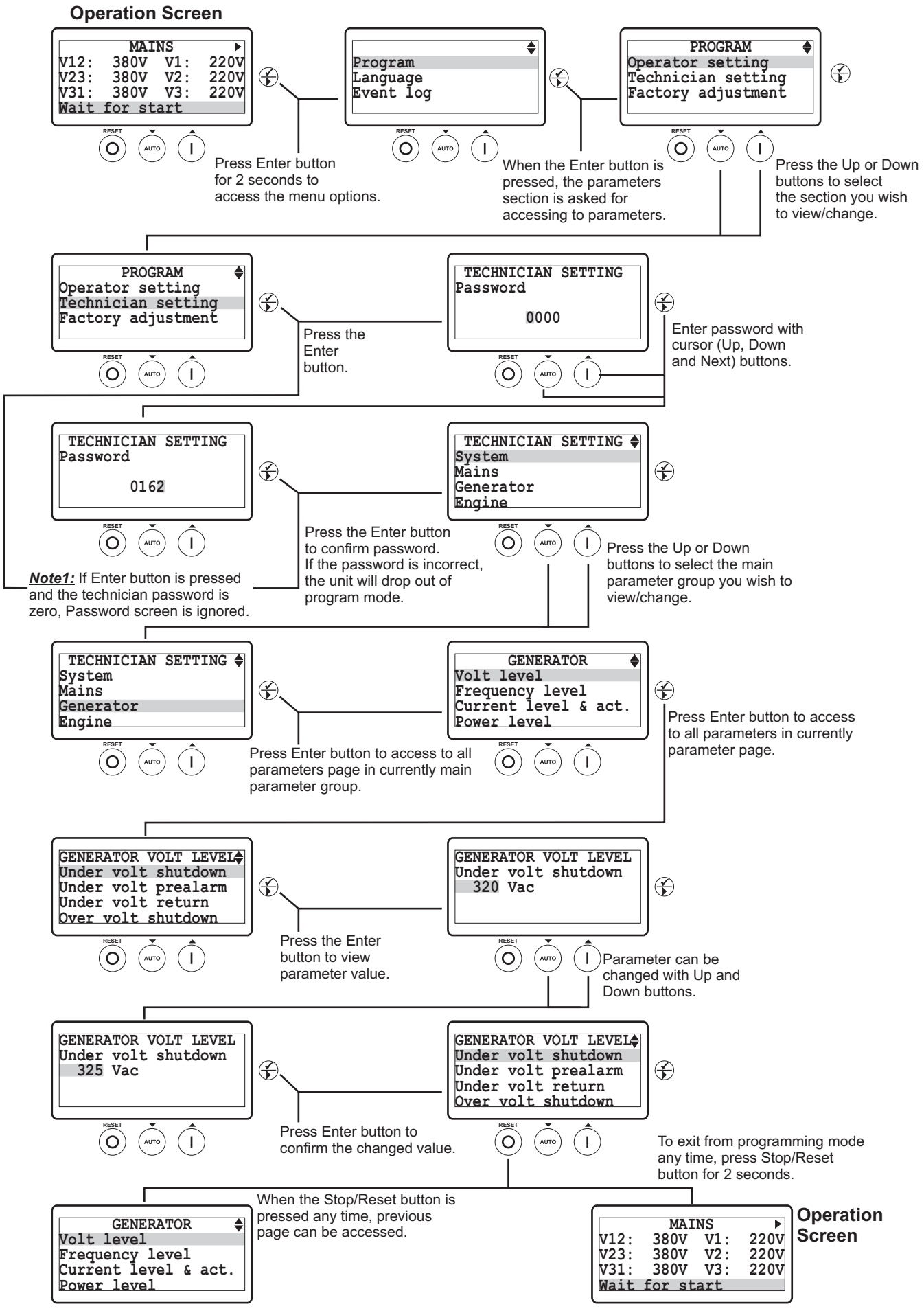

4. Parameters

4.1 Operator Parameters

4.1.1 Mains

MAINS VOLT LEVEL (*Mains->Volt level*)		Min	Max	Default	Unit
Under volt trip	Mains Under Voltage	60	600	320	V~
Under volt reset	Mains Under Voltage Return	60	600	340	V~
Over volt trip	Mains Over Voltage	60	600	440	V~
Over volt reset	Mains Over Voltage Return	60	600	420	V~

MAINS FREQ. LEVEL (*Mains->*Frequency *level*)		Min	Max	Default	Unit
Under freq trip	Mains Under Frequency	20.0	75.0	45.0	Hz
Under freq reset	Mains Under Frequency Return	20.0	75.0	48.0	Hz
Over freq trip	Mains Over Frequency	20.0	75.0	55.0	Hz
Over freq reset	Mains Over Frequency Return	20.0	75.0	52.0	Hz

4.1.2 Generator

GENERATOR VOLT LEVEL (*Generator->Volt level*)		Min	Max	Default	Unit
Under volt shutdown	Generator Under Voltage Shutdown	60(dis)	600	320	V~
Under volt prealarm	Generator Under Voltage Pre-Alarm	60(dis)	600	340	V~
Under volt reset	Generator Under Voltage Pre-Alarm Return	60	600	350	V~
Over volt shutdown	Generator Over Voltage Shutdown	60	600	440	V~
Over volt prealarm	Generator Over Voltage Pre-Alarm	60(dis)	600	420	V~
Over volt reset	Generator Over Voltage Pre-Alarm Return	60	600	400	V~
Shutdown delay time	Generator Voltage Shutdown Delay Time	0.0	10.0	1.0	Sec

GENERATOR FREQ LEVEL (*Generator->Frequency level*)		Min	Max	Default	Unit
Nominal frequency	Nominal Alternator Frequency	30.0	75.0	50.0	Hz
Under freq shutdown	Generator Under Frequency Shutdown	30.0(dis)	75.0	43.0	Hz
Under freq prealarm	Generator Under Frequency Pre-Alarm	30.0(dis)	75.0	45.0	Hz
Under freq reset	Generator Under Frequency Pre-Alarm Return	30.0	75.0	46.0	Hz
Over freq shutdown	Generator Over Frequency Shutdown	30.0(dis)	75.0	58.0	Hz
Over freq prealarm	Generator Over Frequency Pre-Alarm	30.0(dis)	75.0	55.0	Hz
Over freq reset	Generator Over Frequency Pre-Alarm Return	30.0	75.0	54.0	Hz
Shutdown delay time	Generator Frequency Shutdown Delay Time	0.0	10.0	1.0	Sec

GENERATOR CUR LEVEL (*Generator->Current level*)		Min	Max	Default	Unit
Under cur. set	Generator Under Current Set	0	9999	1	A~
Under cur. prealarm	Generator Under Current Pre-Alarm	0(dis)	9999	dis	A~
Under cur. reset	Generator Under Current Pre-Alarm Return	0	9999	5	A~
Over cur. IDMT alarm	Generator Over Current IDMT Alarm	ENABL/DISBL		DISBL	
Over cur. set	Generator Over Current Set	0	9999	9999	A~
Over cur. prealarm	Generator Over Current Pre-Alarm	0(dis)	9999	9990	A~
Over cur. reset	Generator Over Current Pre-Alarm Return	0	9999	9980	A~

Note: dis = disable

GEN POWER LEVEL (*Generator->Power level*)		Min	Max	Default	Unit
Under power set	Generator Under Power Set	0	9999	0	kVA
Under power prealarm	Generator Under Power Pre-Alarm	0(dis)	9999	dis	kVA
Under power reset	Generator Under Power Pre-Alarm Return	0	9999	5	kVA
Over power set	Generator Over Power Set	0	9999	0	kVA
Over power prealarm	Generator Over Power Pre-Alarm	0(dis)	9999	dis	kVA
Over power reset	Generator Over Power Pre-Alarm Return	0	9999	0	kVA
Reverse power set	Reverse Power Set	-9999	0	0	kW

GEN WORKING CALENDAR (*Generator->Working calendar*)		Min	Max	Default	Unit
Disable/enable select	Working Calendar Disable or Enable	DISBL/ENABL		DISBL	
Start time on monday	Working Calendar Work Start Time on Monday	0.00	23.59	0.00	H.Min
Stop time on monday	Working Calendar Work Stop Time on Monday	0.00	23.59	23.59	H.Min
Start time on tues.	Working Calendar Work Start Time on Tuesday	0.00	23.59	0.00	H.Min
Stop time on tuesday	Working Calendar Work Stop Time on Tuesday	0.00	23.59	23.59	H.Min
Start time on wednes.	Working Calendar Work Start Time on Wednesday	0.00	23.59	0.00	H.Min
Stop time on wednes.	Working Calendar Work Stop Time on Wednesday	0.00	23.59	23.59	H.Min
Start time on thurs.	Working Calendar Work Start Time on Thursday	0.00	23.59	0.00	H.Min
Stop time on thursday	Working Calendar Work Stop Time on Thursday	0.00	23.59	23.59	H.Min
Start time on friday	Working Calendar Work Start Time on Friday	0.00	23.59	0.00	H.Min
Stop time on friday	Working Calendar Work Stop Time on Friday	0.00	23.59	23.59	H.Min
Start time on satur.	Working Calendar Work Start Time on Saturday	0.00	23.59	0.00	H.Min
Stop time on saturday	Working Calendar Work Stop Time on Saturday	0.00	23.59	23.59	H.Min
Start time on sunday	Working Calendar Work Start Time on Sunday	0.00	23.59	0.00	H.Min
Stop time on sunday	Working Calendar Work Stop Time on Sunday	0.00	23.59	23.59	H.Min

4.2 Technician Parameters

4.2.1 System

SYSTEM NETWORK (*System->Network*)		Min	Max	Default	Unit
CT ratio	Current Transformer Ratio	1	9999	100	
PT ratio	Voltage Transformer Ratio	1	50	1	
Type of AC system	Select AC system; 0- 1 Phase 2 Wire 1- 3 Phase 4 Wire 2- 2 Phase 3 Wire L1-L2 3- 2 Phase 3 Wire L1-L3	0	3	1	
Phase sequence	Generator Phase Sequence (dis, L123 or L321)	DISBL, L123, L321		DISBL	
Generator kVA rating	Generator kVA Rating Set	0	9999	300	kVA
Power unit	Power Unit	kVA/kW		kVA	
kVA,kW,kVAr point	kVA, kW, kVAr point position; 0 -> 0 1 -> 0.0 2 -> 0.00 3 -> 0.000	0	3	0	

Note-1 : dis = disable

BREAKERS (*System->Breakers*)		Min	Max	Default	Unit
Type of Breaker	Hardware Breaker Selection	0	2	0	
Gen.brk.cls.contact	Gen Close Breaker Contact Type	NO / NC		0	
Gen.brk.cls.relay	Gen Close Breaker Relay Type	NOR / PULS		0	
Gen.brk.cls.time	Gen Close Timer	1	250	5	Sec
Gen.brk.open relay	Gen Open Breaker Relay Type	NOR / PULS		0	
Gen.brk.open time	Gen Open Timer	1	250	5	Sec
Mains.brk.cls.contact	Mains Close Breaker Contact Type	NO / NC		0	
Mains.brk.cls.relay	Mains Close Breaker Relay Type	NOR / PULS		0	
Mains.brk.cls.time	Mains Close Timer	1	250	5	Sec
Mains.brk.open relay	Mains Open Breaker Relay Type	NOR / PULS		0	
Mains.brk.open time	Mains Open Timer	1	250	5	Sec
Break.close puls.time	Breaker Close Pulse Time	0.0	10.0	0.5	Sec
Break.open pulse time	Breaker Open Pulse Time	0.0	10.0	0.5	Sec
Transfer time	Transfer Time	0	250	2	Sec
Spring loading time	Spring Loading Time	1	250	3	Sec
Retry number	Retry Number	1	250	5	

LCD DISPLAY (*System->LCD display*)		Min	Max	Default	Unit
Language*1	Language Selection	ENGLISH/CHINESE		ENGLISH	
Contrast	Digital Contrast	4	9	5	
Auto backlight off	Auto Backlight Off	DISBL/ENABL		DISBL	
Auto scroll time	Auto Scroll Time	0 (dis)	250	0	Sec
Auto scroll number*2	Auto Scroll Number	1	11	3	
Err. mesg scroll time	Scroll Time For Error Messages	1	250	2	Sec

COMMUNICATION (*System->Communication*)		Min	Max	Default	Unit
Slave address	Slave Address	1	247	1	
Baud rate	Baud Rate 0 - 1200 baud 1 - 2400 baud 2 - 4800 baud 3 - 9600 baud 4 - 19200 baud 5 - 38400 baud	0	5	3	
Parity	Parity 0 - NONE 1 - ODD 2 - EVEN	0	2	0	
Stop bit	Stop Bit (0-> 1 stop bit,1-> 2 stop bit)	0	1	0	

Note: *1 = Selectable value of this parameter is “ENGLISH/TURKISH” at Trans-MiniAMF.XXX (TR) devices.

*2 = Max. value of this parameter is equal to 17 at Trans-MiniAMF.CAN devices

NO / NC : Normally Open / Normally Close

NOR / PULS : Normal / Pulse

dis = disable

DATE & TIME SET (*System->Date & time set*)		Min	Max	Default	Unit
RTC	Real time clock enable/disable	ENABL/DISBL		ENABL	
Year	Year	0	99		
Month	Month	1	12		
Day	Date	1	31		
Week	Day of week	1	7		
Hour	Hour	0	23		
Minute	Minute	0	59		
Second	Second	0	59		

DEFAULT SETTINGS (*System->Default settings*)		Min	Max	Default	Unit
Save setting to def.	Save setting to default	YES / NO		NO	
Reset default sets	Reset default sets	YES / NO		NO	
Reset factory sets	Reset factory sets	YES / NO		NO	

PASSWORD SETTINGS (*System->Password settings*)		Min	Max	Default	Unit
Operator password	Operator Password	0	9999	0	
Technician password	Technician Password	0	9999	0	

4.2.2 Mains

MAINS VOLT LEVEL (*Mains->Volt level*)		Min	Max	Default	Unit
Under volt trip	Mains Under Voltage	60	600	320	V~
Under volt reset	Mains Under Voltage Return	60	600	340	V~
Over volt trip	Mains Over Voltage	60	600	440	V~
Over volt reset	Mains Over Voltage Return	60	600	420	V~

MAINS FREQ. LEVEL (*Mains->*Frequency *level*)		Min	Max	Default	Unit
Under freq trip	Mains Under Frequency	20.0	75.0	45.0	Hz
Under freq reset	Mains Under Frequency Return	20.0	75.0	48.0	Hz
Over freq trip	Mains Over Frequency	20.0	75.0	55.0	Hz
Over freq reset	Mains Over Frequency Return	20.0	75.0	52.0	Hz

MAINS ACTIONS (*Mains->*Actions)		Min	Max	Default	Unit
Mains failure detect	Mains Failure Detection En/Dis	ENABL/DISBL		ENABL	
Mains fail.stop mode	Look Mains Failure at Stop Mode En/Dis	ENABL/DISBL		ENABL	
Always return delay	Always Look Mains Return Delay	ENABL/DISBL		DISBL	

4.2.3 Generator

GENERATOR VOLT LEVEL (*Generator->Volt level*)		Min	Max	Default	Unit
Under volt shutdown	Generator Under Voltage Shutdown	60(dis)	600	320	V~
Under volt prealarm	Generator Under Voltage Pre-Alarm	60(dis)	600	340	V~
Under volt reset	Generator Under Voltage Pre-Alarm Return	60	600	350	V~
Over volt shutdown	Generator Over Voltage Shutdown	60	600	440	V~
Over volt prealarm	Generator Over Voltage Pre-Alarm	60(dis)	600	420	V~
Over volt reset	Generator Over Voltage Pre-Alarm Return	60	600	400	V~
Shutdown delay time	Generator Voltage Shutdown Delay Time	0.0	10.0	1.0	Sec

Note: dis = disable

GENERATOR FREQ LEVEL (*Generator->Frequency level*)		Min	Max	Default	Unit
Nominal frequency	Nominal Alternator Frequency	30.0	75.0	50.0	Hz
Under freq shutdown	Generator Under Frequency Shutdown	30.0(dis)	75.0	43.0	Hz
Under freq prealarm	Generator Under Frequency Pre-Alarm	30.0(dis)	75.0	45.0	Hz
Under freq reset	Generator Under Frequency Pre-Alarm Return	30.0	75.0	46.0	Hz
Over freq shutdown	Generator Over Frequency Shutdown	30.0(dis)	75.0	58.0	Hz
Over freq prealarm	Generator Over Frequency Pre-Alarm	30.0(dis)	75.0	55.0	Hz
Over freq reset	Generator Over Frequency Pre-Alarm Return	30.0	75.0	54.0	Hz
Shutdown delay time	Generator Frequency Shutdown Delay Time	0.0	10.0	1.0	Sec

GEN CUR LEVEL & ACT (*Generator->Current level & act.*)		Min	Max	Default	Unit
Under cur. set	Generator Under Current Set	0	9999	1	A~
Under cur. prealarm	Generator Under Current Pre-Alarm	0(dis)	9999	dis	A~
Under cur. reset	Generator Under Current Pre-Alarm Return	0	9999	5	A~
Under cur. act.	Generator Under Current Actions 0 - Disable 1 - Warning (Alarm Only, No Shutdown) 2 - Electrical Trip (Alarm/Off Load Generator Followed By Shutdown After Cooling) 3 - Shutdown (Alarm And Shutdown)	0(dis)	3	dis	
Under act. delay time	Generator Under Current Actions Delay Time	0	99	2	Sec
Over cur. IDMT alarm	Generator Over Current IDMT Alarm	ENABL/DISBL		DISBL	
Over cur. set	Generator Over Current Set	0	9999	9999	A~
Over cur. prealarm	Generator Over Current Pre-Alarm	0(dis)	9999	9990	A~
Over cur. reset	Generator Over Current Pre-Alarm Return	0	9999	9980	A~
Over cur. act.	Generator Over Current Actions 0 - Disable 1 - Warning (Alarm Only, No Shutdown) 2 - Electrical Trip (Alarm/Off Load Generator Followed By Shutdown After Cooling) 3 - Shutdown (Alarm And Shutdown)	0(dis)	3	dis	
Over act. delay time	Generator Over Current Actions Delay Time	0	99	2	Sec
Short circuit cur.	Generator Short Circuit Current Set	0	9999	9999	A~

Note: dis = disable

GEN POWER LEVEL (*Generator->Power level*)		Min	Max	Default	Unit
Under power set	Generator Under Power Set	0	9999	0	kVA
Under power prealarm	Generator Under Power Pre-Alarm	0(dis)	9999	dis	kVA
Under power reset	Generator Under Power Pre-Alarm Reset	0	9999	5	kVA
Under power act.	Generator Under Power Actions 0 - Disable 1 - Warning (Alarm Only, No Shutdown) 2 - Electrical Trip (Alarm/Off Load Generator Followed By Shutdown After Cooling) 3 - Shutdown (Alarm And Shutdown)	0(dis)	3	0(dis)	
Under act. delay time	Generator Under Power Action Delay Time	0	99	2	Sec
Over power set	Generator Over Power Set	0	9999	0	kVA
Over power prealarm	Generator Over Power Pre-Alarm	0(dis)	9999	dis	kVA
Over power reset	Generator Over Power Pre-Alarm Reset	0	9999	0	kVA
Over power act.	Generator Over Power Actions 0 - Disable 1 - Warning (Alarm Only, No Shutdown) 2 - Electrical Trip (Alarm/Off Load Generator Followed By Shutdown After Cooling) 3 - Shutdown (Alarm And Shutdown)	0(dis)	3	0(dis)	
Over act. delay time	Generator Over Power Action Delay Time	0	99	2	Sec
Reverse power set	Reverse Power Set	-9999	0	0	kW
Reverse power act.	Reverse Power Actions 0 - Disable 1 - Warning (Alarm Only, No Shutdown) 2 - Electrical Trip (Alarm/Off Load Generator Followed By Shutdown After Cooling) 3 - Shutdown (Alarm And Shutdown)	0(dis)	3	0(dis)	
Rv.pow.act.delay time	Reverse Power Action Delay Time	0	99	2	Sec

GEN WORKING CALENDAR (*Generator->Working calendar*)		Min	Max	Default	Unit
Disable/enable select	Working Calendar Disable or Enable	DISBL/ENABL		DISBL	
Start time on monday	Working Calendar Work Start Time on Monday	0.00	23.59	0.00	H.Min
Stop time on monday	Working Calendar Work Stop Time on Monday	0.00	23.59	23.59	H.Min
Start time on tues.	Working Calendar Work Start Time on Tuesday	0.00	23.59	0.00	H.Min
Stop time on tuesday	Working Calendar Work Stop Time on Tuesday	0.00	23.59	23.59	H.Min
Start time on wednes.	Working Calendar Work Start Time on Wednesday	0.00	23.59	0.00	H.Min
Stop time on wednes.	Working Calendar Work Stop Time on Wednesday	0.00	23.59	23.59	H.Min
Start time on thurs.	Working Calendar Work Start Time on Thursday	0.00	23.59	0.00	H.Min
Stop time on thursday	Working Calendar Work Stop Time on Thursday	0.00	23.59	23.59	H.Min
Start time on friday	Working Calendar Work Start Time on Friday	0.00	23.59	0.00	H.Min
Stop time on friday	Working Calendar Work Stop Time on Friday	0.00	23.59	23.59	H.Min
Start time on satur.	Working Calendar Work Start Time on Saturday	0.00	23.59	0.00	H.Min
Stop time on saturday	Working Calendar Work Stop Time on Saturday	0.00	23.59	23.59	H.Min
Start time on sunday	Working Calendar Work Start Time on Sunday	0.00	23.59	0.00	H.Min
Stop time on sunday	Working Calendar Work Stop Time on Sunday	0.00	23.59	23.59	H.Min

GENERATOR GENERAL (*Generator->General*)		Min	Max	Default	Unit
Sens.option gen.freq	Sensing Options Generator Frq En/Dis	ENABL/DISBL		ENABL	
Sens.opt.pickup&flywh*[3]	Sensing Opt Pickup En/Dis & Flywheel	0(dis)	1000	DISBL	
All warning are latch	All Warnings Are Latched En/Dis	ENABL/DISBL		DISBL	

Note: *[3] = These parameters are only available at Trans-MiniAMF.MPU
dis = disable

4.2.4 Engine

ENGINE START OPTIONS (*Engine->Starting options*)		Min	Max	Default	Unit
Horn prior start	Audible Alarm Prior To Starting En/Dis	ENABL/DISBL		DISBL	
No. of start attemp	Number Of Start Attempts	1	10	3	
Cranking time	Cranking Time	1	99	5	Sec
Crank rest time	Crank Rest Time	5	99	10	Sec
Pickup fail delay*3	Pickup Sensor Fail Delay(Pickup)	0.1	10.0	3.0	Sec

ENG. CRANK DISCONNECT (*Engine->Crank disconnect*)		Min	Max	Default	Unit
Generator frequency	Crank Disconnect On Gen. Frequency	10.0	75.0	30.0	Hz
Engine speed	Crank Disconnect On Engine RPM	100	6000	500	RPM
Generator volt	Crank Disconnect On Gen. Voltage	60 (dis)	600	300	V~
Charge alt. volt	Crank Disconnect On Charge Alt. Voltage	6.0 (dis)	30.0	dis	V⎓
Oil pres. enab./dis.	Crank Disconnect On Oil Pressure En/Dis	ENABL/DISBL		DISBL	
Oil pressure value	Crank Disconnect On Oil Pressure Value	1.0	30.0	1.0	BAR
Check oil befor.start	Check Oil Pressure Before Start	ENABL/DISBL		ENABL	

ENGINE SPEED SETS (*Engine->Speed settings*)		Min	Max	Default	Unit
Nominal speed	Nominal Speed	500	5000	1500	RPM
Under speed shutdown	Engine Under Speed Shutdown	500(dis)	5000	dis	RPM
Under speed prealarm	Engine Under Speed Prealarm	500(dis)	5000	dis	RPM
Under speed reset	Engine Under Speed Prealarm Return	500	5000	500	RPM
Over speed shutdown	Engine Over Speed Shutdown	500(dis)	5000	dis	RPM
Over speed prealarm	Engine Over Speed Prealarm	500(dis)	5000	dis	RPM
Over speed reset	Engine Over Speed Prealarm Return	500	5000	500	RPM
Shutdown delay time	Engine Speed Shutdown Delay Time	0.0	10.0	1.0	Sec

ENGINE PLANT BATTERY (*Engine->Plant battery*)		Min	Max	Default	Unit
Under volt shutdown	Battery Undervolts Shutdown	6.0(dis)	30.0	dis	V⎓
Under volt warning	Battery Undervolts Warning	6.0(dis)	30.0	11.0	V⎓
Under volt reset	Battery Undervolts Warning Reset	6.0	30.0	11.5	V⎓
Under volt delay	Battery Undervolts Volts Delay	0.0	9.9	1.0	Sec
Over volt shutdown	Battery Overvolts Shutdown	6.0(dis)	30.0	dis	V⎓
Over volt warning	Battery Overvolts Warning	6.0(dis)	30.0	29.0	V⎓
Over volt reset	Battery Overvolts Warning Reset	6.0	30.0	28.5	V⎓
Over volt delay	Battery Overvolts Delay	0.0	9.9	1.0	Sec
Alt. chg. warning	Charge Alternator Warning	6.0(dis)	30.0	dis	V⎓

Note: *3 = These parameters are only available at Trans-MiniAMF.MPU
dis = disable

CANBUS ECU (*Engine->CanBus ECU*)*4		Min	Max	Default	Unit
Baud rate	Baud Rate: 0 - 20 1 - 50 2 - 100 3 - 125 4 - 250 5 - 500 6 - 800 7 - 1.000	0	7	4	kBaud
J1939 ECU type	J1939 ECU Type Selection: 0 - Disable 1 - Standard 2 - Volvo EMS1 3 - Volvo EMS2 4 - Volvo EMS2b 5 - Volvo EDC3 6 - Volvo EDC4 7 - Deutz EMR2 8 - Deutz EMR3 9 - Perkins 1300 10 - Perkins ADEM3 11 - Perkins ADEM4 12 - Scania S6 13 - MAN MFR	0(dis)	13	0	
Device address	Device Address	0	255	17	
SPN version	SPN version	1	3	1	
ECU remote control	ECU Remote Control via J1939	ENABL/DISBL		ENABL	
Speed control enable	Speed Control via J1939	ENABL/DISBL		ENABL	
Oil pres cont. enab	Oil Pressure Control via J1939	ENABL/DISBL		DISBL	
Temp. control enable	Coolant Temperature Control via J1939	ENABL/DISBL		DISBL	
Speed set point	Speed Set Point Selection	1500 / 1800		1500	RPM
Speed correction	Speed Correction Value	0	100	50	%

Note: *4 = Parameters in this table are only available at Trans-MiniAMF.CAN

CANBUS ERROR SET (*Engine->CanBus error set*)*5		Min	Max	Default	Unit
CAN fault actions	Can Fault Actions: 0- Disable 1- Warning Non-Latching 2- Warning (Alarm Only, No Shutdown) 3- Electrical Trip (Alarm/Off Load Generator Followed By Shutdown After Cooling) 4- Shutdown (Alarm And Shutdown)	0(dis)	4	0	
CAN fault activation	Can Fault Activation: 0- Active From Starting 1- Active From Safety On 2- Always Active	0	2	0	
CAN fault delay	Can Fault Delay	2	250	10	Sec
Amber warn.actions	J1939 Amber Warning Lamp Actions: 0- Disable 1- Warning Non-Latching 2- Warning (Alarm Only, No Shutdown) 3- Electrical Trip (Alarm/Off Load Generator Followed By Shutdown After Cooling) 4- Shutdown (Alarm And Shutdown)	0(dis)	4	0	
Amber warn.activation	J1939 Amber Warning Lamp Activation: 0- Active From Starting 1- Active From Safety On 2- Always Active	0	2	2	
Amber warn.delay	J1939 Amber Warning Lamp Delay	0	250	2	Sec
Red stop actions	J1939 Red Stop Lamp Actions: 0- Disable 1- Warning Non-Latching 2- Warning (Alarm Only, No Shutdown) 3- Electrical Trip (Alarm/Off Load Generator Followed By Shutdown After Cooling) 4- Shutdown (Alarm And Shutdown)	0(dis)	4	0	
Red stop activation	J1939 Red Stop Lamp Activation: 0- Active From Starting 1- Active From Safety On 2- Always Active	0	2	2	
Red stop delay	J1939 Red Stop Lamp Delay	0	250	2	Sec

Note: *5 = Parameters in this table are only available at Trans-MiniAMF.CAN
dis = disable

ENGINE MAINTENANCE (*Engine->Maintenance*)		Min	Max	Default	Unit
Running hour interval	Running Hours Interval	0(dis)	9999	5000	Hour
Maint. date interval	Maintenance Date Interval	0(dis)	12	6	Month
Eng. stop when maint	Force Engine Shutdown When Maintenance Is Due	ENABL/DISBL		DISBL	
Engine running hour	Engine Running Hour	0	30000	0	
Maintenance okay	Maintenance Okay	YES/NO		NO	

LOAD TEST (*Engine->Load test*)		Min	Max	Default	Unit
Disable/enable select	Disable, No Load or On Load Selection	0-DISABLE 1-NO LOAD 2-ON LOAD		1-NO LOAD	

EXERCISE (*Engine->Exercise*)		Min	Max	Default	Unit
Disable/enable select	Exercise Disable or Enable	DISBL/ENABL		DISBL	
Start time1 on monday	Exercise Start Time 1 on Monday	0.00	23.59	0.00	H.Min
Stop time1 on monday	Exercise Stop Time 1 on Monday	0.00	23.59	0.00	H.Min
Start time2 on monday	Exercise Start Time 2 on Monday	0.00	23.59	0.00	H.Min
Stop time2 on monday	Exercise Stop Time 2 on Monday	0.00	23.59	0.00	H.Min
Start time3 on monday	Exercise Start Time 3 on Monday	0.00	23.59	0.00	H.Min
Stop time3 on monday	Exercise Stop Time 3 on Monday	0.00	23.59	0.00	H.Min
Start time4 on monday	Exercise Start Time 4 on Monday	0.00	23.59	0.00	H.Min
Stop time4 on monday	Exercise Stop Time 4 on Monday	0.00	23.59	0.00	H.Min
Start time1 on tues.	Exercise Start Time 1 on Tuesday	0.00	23.59	0.00	H.Min
Stop time1 on tuesday	Exercise Stop Time 1 on Tuesday	0.00	23.59	0.00	H.Min
Start time2 on tues.	Exercise Start Time 2 on Tuesday	0.00	23.59	0.00	H.Min
Stop time2 on Tuesday	Exercise Stop Time 2 on Tuesday	0.00	23.59	0.00	H.Min
Start time3 on tues.	Exercise Start Time 3 on Tuesday	0.00	23.59	0.00	H.Min
Stop time3 on tuesday	Exercise Stop Time 3 on Tuesday	0.00	23.59	0.00	H.Min
Start time4 on tues.	Exercise Start Time 4 on Tuesday	0.00	23.59	0.00	H.Min
Stop time4 on tuesday	Exercise Stop Time 4 on Tuesday	0.00	23.59	0.00	H.Min
Start time1 on wednes.	Exercise Start Time 1 on Wednesday	0.00	23.59	0.00	H.Min
Stop time1 on wednes.	Exercise Stop Time 1 on Wednesday	0.00	23.59	0.00	H.Min
Start time2 on wednes.	Exercise Start Time 2 on Wednesday	0.00	23.59	0.00	H.Min
Stop time2 on wednes.	Exercise Stop Time 2 on Wednesday	0.00	23.59	0.00	H.Min
Start time3 on wednes.	Exercise Start Time 3 on Wednesday	0.00	23.59	0.00	H.Min
Stop time3 on wednes.	Exercise Stop Time 3 on Wednesday	0.00	23.59	0.00	H.Min
Start time4 on wednes.	Exercise Start Time 4 on Wednesday	0.00	23.59	0.00	H.Min
Stop time4 on wednes.	Exercise Stop Time 4 on Wednesday	0.00	23.59	0.00	H.Min
Start time1 on thurs.	Exercise Start Time 1 on Thursday	0.00	23.59	0.00	H.Min
Stop time1 on thurs.	Exercise Stop Time 1 on Thursday	0.00	23.59	0.00	H.Min
Start time2 on thurs.	Exercise Start Time 2 on Thursday	0.00	23.59	0.00	H.Min
Stop time2 on thurs.	Exercise Stop Time 2 on Thursday	0.00	23.59	0.00	H.Min
Start time3 on thurs.	Exercise Start Time 3 on Thursday	0.00	23.59	0.00	H.Min
Stop time3 on thurs.	Exercise Stop Time 3 on Thursday	0.00	23.59	0.00	H.Min
Start time4 on thurs.	Exercise Start Time 4 on Thursday	0.00	23.59	0.00	H.Min
Stop time4 on thurs.	Exercise Stop Time 4 on Thursday	0.00	23.59	0.00	H.Min

Note: dis = disable

Start time1 on friday	Exercise Start Time 1 on Friday	0.00	23.59	0.00	H.Min
Stop time1 on friday	Exercise Stop Time 1 on Friday	0.00	23.59	0.00	H.Min
Start time2 on friday	Exercise Start Time 2 on Friday	0.00	23.59	0.00	H.Min
Stop time2 on friday	Exercise Stop Time 2 on Friday	0.00	23.59	0.00	H.Min
Start time3 on friday	Exercise Start Time 3 on Friday	0.00	23.59	0.00	H.Min
Stop time3 on friday	Exercise Stop Time 3 on Friday	0.00	23.59	0.00	H.Min
Start time4 on friday	Exercise Start Time 4 on Friday	0.00	23.59	0.00	H.Min
Stop time4 on friday	Exercise Stop Time 4 on Friday	0.00	23.59	0.00	H.Min
Start time1 on satur.	Exercise Start Time 1 on Saturday	0.00	23.59	0.00	H.Min
Stop time1 on satur.	Exercise Stop Time 1 on Saturday	0.00	23.59	0.00	H.Min
Start time2 on satur.	Exercise Start Time 2 on Saturday	0.00	23.59	0.00	H.Min
Stop time2 on satur.	Exercise Stop Time 2 on Saturday	0.00	23.59	0.00	H.Min
Start time3 on satur.	Exercise Start Time 3 on Saturday	0.00	23.59	0.00	H.Min
Stop time3 on satur.	Exercise Stop Time 3 on Saturday	0.00	23.59	0.00	H.Min
Start time4 on satur.	Exercise Start Time 4 on Saturday	0.00	23.59	0.00	H.Min
Stop time4 on satur.	Exercise Stop Time 4 on Saturday	0.00	23.59	0.00	H.Min
Start time1 on sunday	Exercise Start Time 1 on Sunday	0.00	23.59	0.00	H.Min
Stop time1 on sunday	Exercise Stop Time 1 on Sunday	0.00	23.59	0.00	H.Min
Start time2 on sunday	Exercise Start Time 2 on Sunday	0.00	23.59	0.00	H.Min
Stop time2 on sunday	Exercise Stop Time 2 on Sunday	0.00	23.59	0.00	H.Min
Start time3 on sunday	Exercise Start Time 3 on Sunday	0.00	23.59	0.00	H.Min
Stop time3 on sunday	Exercise Stop Time 3 on Sunday	0.00	23.59	0.00	H.Min
Start time4 on sunday	Exercise Start Time 4 on Sunday	0.00	23.59	0.00	H.Min
Stop time4 on sunday	Exercise Stop Time 4 on Sunday	0.00	23.59	0.00	H.Min

ENGINE GENERAL (*Engine->General*)		**Min**	**Max**	**Default**	**Unit**
Fuel selection	Engine Fuel Selection	0-GAS 1-DIESEL 2-GASOLINE		1-DIESEL	
Stop solenoid time	Stop Solenoid Time	1	99	20	Sec
Ignition delay	Ignition Delay	1	99	5	Sec
Gas valve delay	Gas Valve Delay	1	99	5	Sec
Min. of ignition speed	Minimum Ignition Speed	10	1500	200	RPM
Choke time	Choke Time	0.0	30.0	0.8	Sec

4.2.5 Inputs

SENDER INPUTS (*Inputs->Sender inputs*)		Min	Max	Default	Unit
Oil pressure unit	Oil Pressure Unit	BAR/PSI/KPA		BAR	
Oil press. input type	Oil Pressure Input Type	0 - Not Used (Disable) 1 - Digital NC 2 - Digital NO 3 - VDO 5 BAR 4 - VDO 7 BAR 5 - VDO 10 BAR 6 - DATCON 5 BAR 7 - DATCON 7 BAR 8 - MURPHY 7 BAR 9 - User Configured		3	
Oil pressure prealarm	Oil Pressure Pre-Alarm	0.0 (dis)	30.0	1.2	BAR
Oil pressure reset	Oil Pressure Pre-Alarm Reset	0.0	30.0	1.4	BAR
Oil pressure shutdown	Oil Pressure Shutdown	0.0	30.0	1.0	BAR
Temperature unit	Coolant Temperature Unit	ºC/ºF		ºC	
Temp. input type	Coolant Temperature Input Type	0 - Not Used (Disable) 1 - Digital NC 2 - Digital NO 3 - VDO 120 ºC 4 - VDO 150 ºC 5 - DATCON 6 - MURPHY 7 - PT100 8 - User Configured		3	
Temp. sensor break	Temperature Sensor Break	0 - Disable 1 - Enable From Safety On (3min. delayed) 2 - Always Enable		0 (dis)	
High temp. prealarm	High Temperature Pre-Alarm	0 (dis)	300	90	ºC
High temp. reset	High Temp. Pre-Alarm Reset	0	300	88	ºC
High temp. shutdown	High Temperature Shutdown	0	300	95	ºC
Low temp. warning	Low Temperature Warning	0 (dis)	70	0 (dis)	ºC
Heater control ON	Coolant Heater Control On	0 (dis)	300	0 (dis)	ºC
Heater control OFF	Coolant Heater Control Off	0	300	45	ºC
Water pump on time	Water Pump On Time	0	9999	5	Sec
Water pump off time	Water Pump Off Time	0	9999	5	Sec
Conf. AI unit	Configurable Analog Input Unit	BAR/PSI/KPA/ºC/ºF/%/Lt		%	
Conf. AI type	Configurable Analog Input Type	0 - Not Used (Disable) 1 - Digital NC 2 - Digital NO 3 - VDO OHM (10-180) 4 - VDO TUBE (90-0) 5 - US OHM (240-33) 6 - EMS OHM (0-190) 7 - FORD (73-10) 8 - User Configured		0 (dis)	
Conf. AI low prealrm	Configurable Analog Input Low Pre-Alarm	0 (dis)	3000	0 (dis)	%
Conf. AI low reset	Configurable Analog Input Low Reset	0	3000	60	%
Conf. AI low shutdwn	Configurable Analog Input Low Shutdown	0 (dis)	3000	0 (dis)	%
Conf. AI high prealr	Configurable Analog Input High Pre-Alarm	0 (dis)	3000	0 (dis)	%

Conf. AI high reset	Configurable Analog Input High Reset	0	3000	90	%
Conf. AI high shutd.	Configurable Analog Input High Shutdown	0 (dis)	3000	0 (dis)	%
Conf. AI control ON	Configurable Analog Input control ON	0 (dis)	3000	0 (dis)	%
Conf. AI control OFF	Configurable Analog Input control OFF	0	3000	75	%

SENDER LINEARISATION (*Inputs->Sender linearisation*)		Min	Max	Default	Unit
Oil pressure sender 1	Oil Pressure Sender Point-1	0	1300	11	R
Oil pressure 1	Oil Pressure Point-1	0.0	30.0	0.0	BAR
Oil pressure sender 2	Oil Pressure Sender Point-2	0	1300	29	R
Oil pressure 2	Oil Pressure Point-2	0.0	30.0	0.5	BAR
Oil pressure sender 3	Oil Pressure Sender Point-3	0	1300	47	R
Oil pressure 3	Oil Pressure Point-3	0.0	30.0	1.0	BAR
Oil pressure sender 4	Oil Pressure Sender Point-4	0	1300	65	R
Oil pressure 4	Oil Pressure Point-4	0.0	30.0	1.5	BAR
Oil pressure sender 5	Oil Pressure Sender Point-5	0	1300	82	R
Oil pressure 5	Oil Pressure Point-5	0.0	30.0	2.0	BAR
Oil pressure sender 6	Oil Pressure Sender Point-6	0	1300	100	R
Oil pressure 6	Oil Pressure Point-6	0.0	30.0	2.5	BAR
Oil pressure sender 7	Oil Pressure Sender Point-7	0	1300	117	R
Oil pressure 7	Oil Pressure Point-7	0.0	30.0	3.0	BAR
Oil pressure sender 8	Oil Pressure Sender Point-8	0	1300	134	R
Oil pressure 8	Oil Pressure Point-8	0.0	30.0	3.5	BAR
Oil pressure sender 9	Oil Pressure Sender Point-9	0	1300	151	R
Oil pressure 9	Oil Pressure Point-9	0.0	30.0	4.0	BAR
Oil pressure sender 10	Oil Pressure Sender Point-10	0	1300	184	R
Oil pressure 10	Oil Pressure Point-10	0.0	30.0	5.0	BAR
Temperature sender 1	Temperature Sender Point-1	0	1300	291	R
Temperature 1	Temperature Point-1	0	300	40	ºC
Temperature sender 2	Temperature Sender Point-2	0	1300	197	R
Temperature 2	Temperature Point-2	0	300	50	ºC
Temperature sender 3	Temperature Sender Point-3	0	1300	134	R
Temperature 3	Temperature Point-3	0	300	60	ºC
Temperature sender 4	Temperature Sender Point-4	0	1300	97	R
Temperature 4	Temperature Point-4	0	300	70	ºC
Temperature sender 5	Temperature Sender Point-5	0	1300	70	R
Temperature 5	Temperature Point-5	0	300	80	ºC
Temperature sender 6	Temperature Sender Point-6	0	1300	51	R
Temperature 6	Temperature Point-6	0	300	90	ºC
Temperature sender 7	Temperature Sender Point-7	0	1300	38	R
Temperature 7	Temperature Point-7	0	300	100	ºC
Temperature sender 8	Temperature Sender Point-8	0	1300	29	R
Temperature 8	Temperature Point-8	0	300	110	ºC
Temperature sender 9	Temperature Sender Point-9	0	1300	22	R
Temperature 9	Temperature Point-9	0	300	120	ºC
Temperature sender 10	Temperature Sender Point-10	0	1300	15	R
Temperature 10	Temperature Point-10	0	300	140	ºC
Conf. AI sender 1	Configurable Analog Input Sender Point-1	0	1300	10	R
Conf. AI value 1	Configurable Analog Input Point-1	0	3000	0	%
Conf. AI sender 2	Configurable Analog Input Sender Point-2	0	1300	30	R
Conf. AI value 2	Configurable Analog Input Point-2	0	3000	11	%
Conf. AI sender 3	Configurable Analog Input Sender Point-3	0	1300	50	R
Conf. AI value 3	Configurable Analog Input Point-3	0	3000	22	%
Conf. AI sender 4	Configurable Analog Input Sender Point-4	0	1300	70	R
Conf. AI value 4	Configurable Analog Input Point-4	0	3000	33	%
Conf. AI sender 5	Configurable Analog Input Sender Point-5	0	1300	90	R
Conf. AI value 5	Configurable Analog Input Point-5	0	3000	44	%

Conf. AI sender 6	Configurable Analog Input Sender Point-6	0	1300	110	R
Conf. AI value 6	Configurable Analog Input Point-6	0	3000	55	%
Conf. AI sender 7	Configurable Analog Input Sender Point-7	0	1300	130	R
Conf. AI value 7	Configurable Analog Input Point-7	0	3000	66	%
Conf. AI sender 8	Configurable Analog Input Sender Point-8	0	1300	150	R
Conf. AI value 8	Configurable Analog Input Point-8	0	3000	77	%
Conf. AI sender 9	Configurable Analog Input Sender Point-9	0	1300	170	R
Conf. AI value 9	Configurable Analog Input Point-9	0	3000	88	%
Conf. AI sender 10	Configurable Analog Input Sender Point-10	0	1300	190	R
Conf. AI value 10	Configurable Analog Input Point-10	0	3000	100	%

CONF. INPUT-X (*Inputs->Conf. input-x*)		Min	Max	Default	Unit
Dis,user conf.or list	0- Disable 1- User Configured 2- Select From List	0(dis)	2	in1=2 in2=0 in3=0	
Polarity	0- Normally Open (Close To Activate) 1- Normally Close (Open To Activate)	0	1	in1=1 in2, 3=0	
Indication	If User Configured 0- Status 1- Warning Non-Latching 2- Warning Latching 3- Electrical Trip 4- Shutdown	0	4	in1=0 in2=0 in3=0	
Activation	If User Configured 0- Active From Starting 1- Active From Safety On 2- Always Active	0	2	in1, 2=2 in3=2	
Select from list	If Select From List 0-Remote Start On Load 1-Remote Start Off Load 2-Auxiliary Mains Fail 3-Reserved 4-Failures Masked 5-Reserved 6-Simulate Auto Button 7-Simulate Test Button 8-Reserved 9-Simulate Start Button 10-Simulate Stop Button 11-Generator Closed Auxiliary 12-Generator Load Inhibit 13-Mains Closed Auxiliary 14-Mains Load Inhibit 15-Auto Restore Inhibit 16-Auto Start Inhibit 17-Panel Lock 18-Scheduled Runs(Exercise) Inhibited 19-Reserved 20-Reserved 21-Reserved 22-Remote Inhibit 23-Being Found Alive 24-Low Battery 25-Low Oil Pressure 26-High Temperature 27-Emergency Stop 28-Low Oil Level	0	28	in1=27 in2=3 in3=4	
Active delay	Input active delay	0	250	in1=0 in2=5 in3=5	Sec

Note-1 : x = 1(input-1), 2(input-2) or 3(input-3)

Note-2 : dis = disable

4.2.6 Outputs

CONF. OUTPUT-1 (*Outputs->Conf. output-1*)		Min	Max	Default	Unit
Polarity	0- Normally Open (Close To Activate) 1- Normally Close (Open To Activate)	0	1	0	
Function	0-NOT USED 1-AIR FLAP CONTROL 2-ALARM RESET 3-AUDIBLE ALARM 4-AUTO START INHIBIT 5-AUXILIARY MAINS FAILURE 6-BATTERY HIGH VOLTAGE 7-BATTERY LOW VOLTAGE 8-CALLING FOR SCHEDULED RUN(EXERCISE) 9-CAN ECU POWER (only available at Trans-MiniAMF.CAN) 10-CAN ECU STOP (only available at Trans-MiniAMF.CAN) 11-CHARGE ALTERNATOR FAILURE 12-COMMON ALARM 13-COMMON ELECTRICAL TRIP ALARM 14-COMMON SHUTDOWN ALARM 15-COMMON WARNING ALARM 16-COOLING FAN AFTER START 17-COOLING FAN AFTER STOP 18-COOLANT TEMPERATURE HIGH PRE-ALARM 19-COOLANT TEMPERATURE HIGH SHUTDOWN 20-COOLING DOWN TIMER IN PROGRESS 21-CRANK RELAY ENERGISED 22-DELAYED ALARMS ACTIVE 23-DIGITAL INPUT1 ALARM 24-DIGITAL INPUT2 ALARM 25-DIGITAL INPUT3 ALARM 26-WATER PUMP 27-RESERVED 28-RESERVED 29-RESERVED 30-RESERVED 31-RESERVED 32-RESERVED 33-RESERVED 34-RESERVED 35-RESERVED 36-RESERVED 37-RESERVED 38-RESERVED 39-EMERGENCY STOP 40-FAIL TO START ALARM 41-FAIL TO STOP ALARM 42-CONFIGURABLE ANALOG INPUT CONTROL 43-FUEL RELAY ENERGISED 44-GAS ENGINE IGNITION OUTPUT 45-GENERATOR AT REST 46-GENERATOR AVAILABLE 47-GENERATOR CLOSED AUXILIARY 48-GENERATOR FAILED TO CLOSE 49-GENERATOR FAILED TO OPEN 50-GENERATOR HIGH FREQUENCY PRE-ALARM 51-GENERATOR HIGH FREQUENCY SHUTDOWN 52-GENERATOR HIGH VOLTAGE PRE-ALARM 53-GENERATOR HIGH VOLTAGE SHUTDOWN 54-GENERATOR LOAD INHIBIT 55-GENERATOR LOW FREQUENCY PRE-ALARM 56-GENERATOR LOW FREQUENCY SHUTDOWN 57-GENERATOR LOW VOLTAGE PRE-ALARM 58-GENERATOR LOW VOLTAGE SHUTDOWN 59-GENERATOR STOPPING 60-GENERATOR OPEN BREAKER 61-HORN OUTPUT LATCHED 62-HORN OUTPUT PULSED 63-LAMP TEST 64-RESERVED 65-LOSS OF MAGNETIC PICK-UP SPEED SIGNAL (only available at Trans-MiniAMF.MPU) 66-LOW TEMPERATURE 67-MAINTENANCE DUE ALARM 68-MAINS CLOSED AUXILIARY 69-MAINS FAILED TO CLOSE 70-MAINS FAILED TO OPEN 71-MAINS FAILURE 72-MAINS HIGH FREQUENCY 73-MAINS HIGH VOLTAGE 74-MAINS LOAD INHIBIT 75-MAINS LOW FREQUENCY 76-MAINS LOW VOLTAGE 77-MAINS OPEN BREAKER 78-NO LOADING COMMAND 79-OIL PRESSURE LOW PRE-ALARM 80-OIL PRESSURE LOW SHUTDOWN 81-CONFIGURABLE ANALOG INPUT HIGH PREALARM 82-CONFIGURABLE ANALOG INPUT HIGH SHUTDOWN 83-OVER CURRENT PRE-ALARM 84-OVER CURRENT 85-OVER POWER PRE-ALARM 86-OVER POWER SHUTDOWN 87-OVERSPEED PRE-ALARM 88-OVERSPEED SHUTDOWN 89-PANEL LOCK 90-PRE-HEAT(during preheat timer) 91-PRE-HEAT(until end of cranking) 92-PRE-HEAT(until end of warming) 93-PRE-HEAT(until end safety on) 94-REMOTE START PRESENT 95-REMOTE STOP DELAY IN PROGRESS 96-SHORT CIRCUIT 97-SMOKE LIMITING 98-STARTING ALARM 99-STARTING ALARMS ARMED 100-STOP RELAY ENERGISED 101-SYSTEM IN AUTO MODE 102-SYSTEM IN MANUAL MODE 103-SYSTEM IN STOP MODE 104-SYSTEM IN TEST MODE 105-UNDER CURRENT PRE-ALARM 106-UNDER CURRENT 107-UNDER POWER PRE-ALARM 108-UNDER POWER SHUTDOWN 109-UNDERSPEED PRE-ALARM 110-UNDERSPEED SHUTDOWN 111-WAITING FOR GENERATOR 112-REVERSE POWER 113-LOAD SUPPLY FROM GENERATOR 114-LOAD SUPPLY FROM MAINS 115-CONFIGURABLE ANALOG INPUT LOW PRE-ALARM 116-CONFIGURABLE ANALOG INPUT LOW SHUTDOWN 117-RESERVED 118-RESERVED 119-RESERVED 120-HEATER CONTROL 121-CHOKE ACTIVE 122-REMOTE CONTROL ACTIVE	0	122	43	

CONF. OUTPUT-2 (*Outputs->Conf. output-2*)		Min	Max	Default	Unit
Polarity	0- Normally Open (Close To Activate) 1- Normally Close (Open To Activate)	0	1	0	
Function	The same as Configurable Output-1 options	0	122	21	

CONF. OUTPUT-3 (*Outputs->Conf. output-3*)		Min	Max	Default	Unit
Polarity	0- Normally Open (Close To Activate) 1- Normally Close (Open To Activate)	0	1	0	
Function	The same as Configurable Output-1 options	0	122	62	

CONF. OUTPUT-4 (*Outputs->Conf. output-4*)		Min	Max	Default	Unit
Polarity	0- Normally Open (Close To Activate) 1- Normally Close (Open To Activate)	0	1	0	
Function	The same as Configurable Output-1 options	0	122	12	

CONF. OUTPUT-5 (*Outputs->Conf. output-5*)		Min	Max	Default	Unit
Polarity	0- Normally Open (Close To Activate) 1- Normally Close (Open To Activate)	0	1	0	
Function	The same as Configurable Output-1 options	0	122	13	

CONF. OUTPUT-6 (*Outputs->Conf. output-6*)		Min	Max	Default	Unit
Polarity	0- Normally Open (Close To Activate) 1- Normally Close (Open To Activate)	0	1	0	
Function	The same as Configurable Output-1 options	0	122	14	

4.2.7 Timers

START TIMERS (*Timers->Start timers*)		Min	Max	Default	Unit
Mains transient delay	Mains Transient Delay	0.0	20.0	2.0	Sec
Mains fail start dely	Mains Fail Start Delay	0	9999	0	Sec
Remote start delay	Remote Start Delay	0	3600	4	Sec
Pre-heat	Pre-Heat	0	250	3	Sec
Pre-heat bypass	Pre-Heat Bypass	0	250	0	Min
Safety on delay	Safety On Delay	0	99	5	Sec
Warming up time	Warmup Time	0	250	3	Sec
Horn duration	Horn Duration	0 (dis)	999	60	Sec
Chg. excitation time	Charge Excitation Time	0	99(cont)	15	Sec
Cooling fan time	Cooling Fan Time	0	250	180	Sec
Idle mode time	Idle Mode Time (Smoke Limiting)	0 (dis)	3600	dis	Sec
Idle mode time off	Idle Mode Time Off (Smoke Limiting Off)	0	250	5	Sec

STOPPING TIMERS (*Timers->Stopping timers*)		Min	Max	Default	Unit
Mains return delay	Mains Return Delay	0	3600	5	Sec
Remote stop delay	Remote Stop Delay	0	250	4	Sec
Cooling time	Cooling Time	0 (dis)	3600	60	Sec
Fail to stop delay	Fail To Stop Time	15	999	30	Sec
Battery charging time	Battery Charging Time	1	9999	5	Min

Note: dis = disable cont = continuous

4.2.8 User Adjustment

MAINS VOLTAGE OFFSET (*User adjustment->Mains voltage offset*)		Min	Max	Default	Unit
Mains V1 offset	Mains V1 Offset	-20	20	0	V~
Mains V2 offset	Mains V2 Offset	-20	20	0	V~
Mains V3 offset	Mains V3 Offset	-20	20	0	V~

GEN. VOLTAGE OFFSET (*User adjustment->Gen. voltage offset*)		Min	Max	Default	Unit
Gen. V1 offset	Generator V1 Offset	-20	20	0	V~

CURRENT OFFSET (*User adjustment->Current offset*)		Min	Max	Default	Unit
Current I1 offset	Current I1 Offset	-20	20	0	A~

BATTERY&CHRG GEN.VOL (*User adjustment->Battery&chrg gen.vol*)		Min	Max	Default	Unit
Batt.volt offset	Battery Voltage Offset	-5.0	5.0	0	V⎓
Gen.chg.volt offset	Charge Generator Voltage Offset	-5.0	5.0	0	V⎓

SENDER INPUTS OFFSET (*User adjustment->Sender inputs offset*)		Min	Max	Default	Unit
Oil Pressure offset	Oil Pressure Offset	-2.0	2.0	0.0	BAR
Temperature offset	Coolant Temperature Offset	-20	20	0	ºC
Conf. AI offset	Configurable Analog Input Offset	-200	200	0	%

5. Specifications

Equipment use	: Electrical control equipment for generating sets.
Housing & Mounting	:111 mm x 81 mm x 61 mm. (including connectors). Plastic housing for panel mounting.
Panel Cut-Out	: 81mm x 70mm.
Protection Against Mech. Impacts	: 1Joule (IK06).
Protection Class	: IP65 at front panel.
Weight	: Approximately 0,3 Kg.
Environmental rating	: Standard, indoor at an altitude of less then 2000 meters with non-condensing humidity.
Operating/Storage Temperature	: -20°C to +70°C / -30°C to +80°C
Operating/Storage Humidity	: 95 % max. (non-condensing)
Vibration	: EN 60068-2-6 Ten sweeps in each of three major axes 5Hz to 8Hz @ +/-7.5mm, 8Hz to 500Hz @ 2gn.
Shock	: EN 60068-2-27 Three shocks in each of three major axes 15gn in 11mS.
Installation Over Volt. Category	: II Appliances, portable equipment
Pollution Degree	: II, Normal office or workplace, non conductive pollution
Mode of Operation	: Continuous.
Supply Voltage and Power	: 8 to 32 V⎓ (Peak: 36 V⎓) - 3.2W
Cranking Dropouts	: Battery voltage can be “0” VDC for max. 50 ms during cranking (battery voltage should be at least nominal voltage before cranking).
Battery Voltage Measurement	: 8 to 32 V ⎓, accuracy: 1 % FS, resolution: 0,1 V
Mains Voltage Measurement	: 10 to 300 VAC Ph-N, 5 to 99.9 Hz. Accuracy: 1 % FS, Resolution: 1 V, Harmonics: Up to 11th.
Mains Frequency	: 5 to 99.9Hz (min. 20 VAC Ph-N) Accuracy: 0,25 % FS, Resolution: 0,1 Hz.
Generator Voltage Measurement	: 10 to 300 VAC Ph-N, 5 to 99.9 Hz. Accuracy: 1 % FS, Resolution: 1 V, Harmonics: Up to 11th.
Generator Frequency	: 5 to 99.9Hz (min. 20 VAC Ph-N) Accuracy: 0,25 % FS, Resolution: 0,1 Hz.
Magnetic Pickup Input	: 35 to 10000 Hz (4 to 35 volts peak continuously). Accuracy: 0,25 % FS. (Only available at Trans-MiniAMF.MPU devices)
CT secondary	: 5A.
Charge Generator Excitation	: 210mA @12V, 105mA @24V. Nominal 2.5W.
Charge Gen. Vol. Measurement	: 8 to 32 V ⎓, accuracy: 1 % FS, resolution: 0,1 V.
Sender Measurement	: 0 to 1300 ohm, accuracy: 1 % FS, resolution: 1 ohm.
Communication interface	: RS-232, CanBus communication with 1939 ECU(Only available at Trans-MiniAMF.CAN devices)
Relay Outputs	: Generator contactor relay output 8A@250V~ Mains contactor relay output 8A@250V~

Transistor Outputs	: Fuel or Configurable output-1 1A at DC supply voltage Crank or Configurable output-2 1A at DC supply voltage Configurable output-3 1A at DC supply voltage Configurable output-4 1A at DC supply voltage Configurable output-5 1A at DC supply voltage Configurable output-6 1A at DC supply voltage All transistor ouputs supplied from DC supply terminal 12
Approvals	: EAC , CE

6. Other Informations

Manufacturer Information:
Emko Elektronik Sanayi ve Ticaret A.Ş.
Bursa Organize Sanayi Bölgesi, (Fethiye OSB Mah.)
Ali Osman Sönmez Bulvarı 2. Sokak, No:3
16215 Nilüfer - BURSA / TÜRKİYE
Phone : +90 224 261 19 00
Fax : +90 224 261 19 12

Repair and maintenance service information:
Emko Elektronik Sanayi ve Ticaret A.Ş.
Bursa Organize Sanayi Bölgesi, (Fethiye OSB Mah.)
Ali Osman Sönmez Bulvarı 2. Sokak, No:3
16215 Nilüfer - BURSA / TÜRKİYE
Phone : +90 224 261 19 00
Fax : +90 224 261 19 12

7. Order Information

Trans-MiniAMF : Automatic GenSet controller with transfer switching
Trans-MiniAMF.CAN : Automatic GenSet controller with transfer switching, CanBus J1939 ECU communication
Trans-MiniAMF.MPU : Automatic GenSet controller with transfer switching, speed sensing from Magnetic Pickup

Note: Devices have time clock. If real time clock is needed, “RTC” expression must be added to end of order code.
Example: Trans-MiniAMF.MPU.RTC

PRC Technologies Corp., Ltd. ลาดพร้าว 101 กรุงเทพ 10240
โทรศัพท์ : 02 530 1714, 02 932 1711 มือถือ : 086 360 8600
อีเมล : contact@prctech.net LINE ID1 : prctec-info, LINE ID2 : @prct

PC Software

https://www.emkoelektronik.com.tr/en/products/trans-miniamf