


# TRANS-MINIATS

AUTOMATIC TRANSFER SWITCH

## 1.Introduction

### 1.1 General Specifications

The unit provides the mains voltage monitoring and automatic transfer switching. In the event of a mains voltage failure, the remote start relay output is energized and the unit automatically transfers the load from the mains to the generator. Both automatic and manual control is possible. A test mode is also available which allows the generator to be run without taking the load.

The unit is extensively programmable through the front panel, with password protection on two levels. Operational parameters can also be monitored and controlled from a PC via a built-in RS-232 communication port.

The unit monitors generator operation and gives warning of any faults that are detected.
If a fault is detected, the unit shuts down the engine and shows the failure message on the LCD display.

### 1.2 Warranty

EMKO Elektronik warrants that the equipment delivered is free from defects in material and workmanship. This warranty is provided for a period of two years. The warranty period starts from the delivery date. This warranty is in force if duty and responsibilities which are determined in warranty document and instruction manual performs by the customer completely.

### 1.3 Maintenance

Repairs should only be performed by trained and specialized personnel. Cut power to the device before accessing internal parts.
Do not clean the case with hydrocarbon-based solvents (Petrol, Trichlorethylene etc.). Use of these solvents can reduce the mechanical reliability of the device. Use a cloth dampened in ethyl alcohol or water to clean the external plastic case.

## 2. Installation

**Before beginning installation of this product, please read the instruction manual and warnings below carefully.**

A visual inspection of this product for possible damage occured during shipment is recommended before installation. It is your responsibility to ensure that qualified mechanical and electrical technicians install this product.

If there is danger of serious accident resulting from a failure or defect in this unit , power off the system and seperate the electrical connection of the device from the system.

Keep the power off until all of the wiring is completed so that electric shock and trouble with the unit can be prevented.

## 2.1 Unit Configuration

The unit can be programmed using the buttons and LCD display on the front panel or PC Software.

## 2.2 Panel Mounting

The unit is designed for panel mounting. Fixing is by two screw fixings.
**1-** Insert the unit in the panel cut-out from the front.
**2-** Insert the fixings in the slotted at the corners of the unit and tighten the fixing screws to secure the unit against the panel.

**During the equipment is putted in hole on the metal panel while mechanical installation some metal burrs can cause injury on hands, you must be careful.**

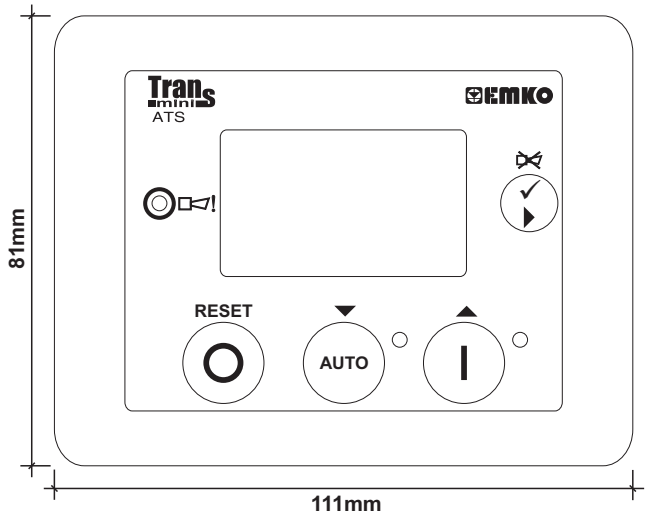


Figure 2.1 Front View

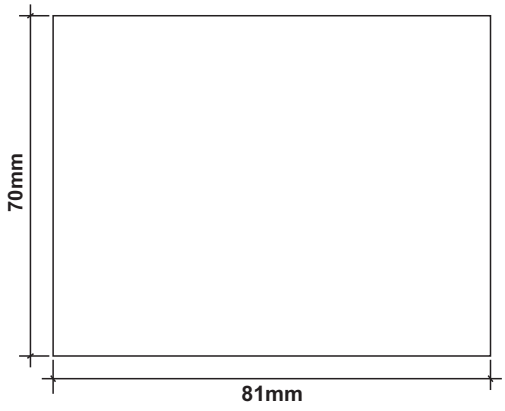


Figure 2.2 Panel Cut-Out

## 2.3 Electrical Connection

TRANS-MINIATS three phase connections schematic

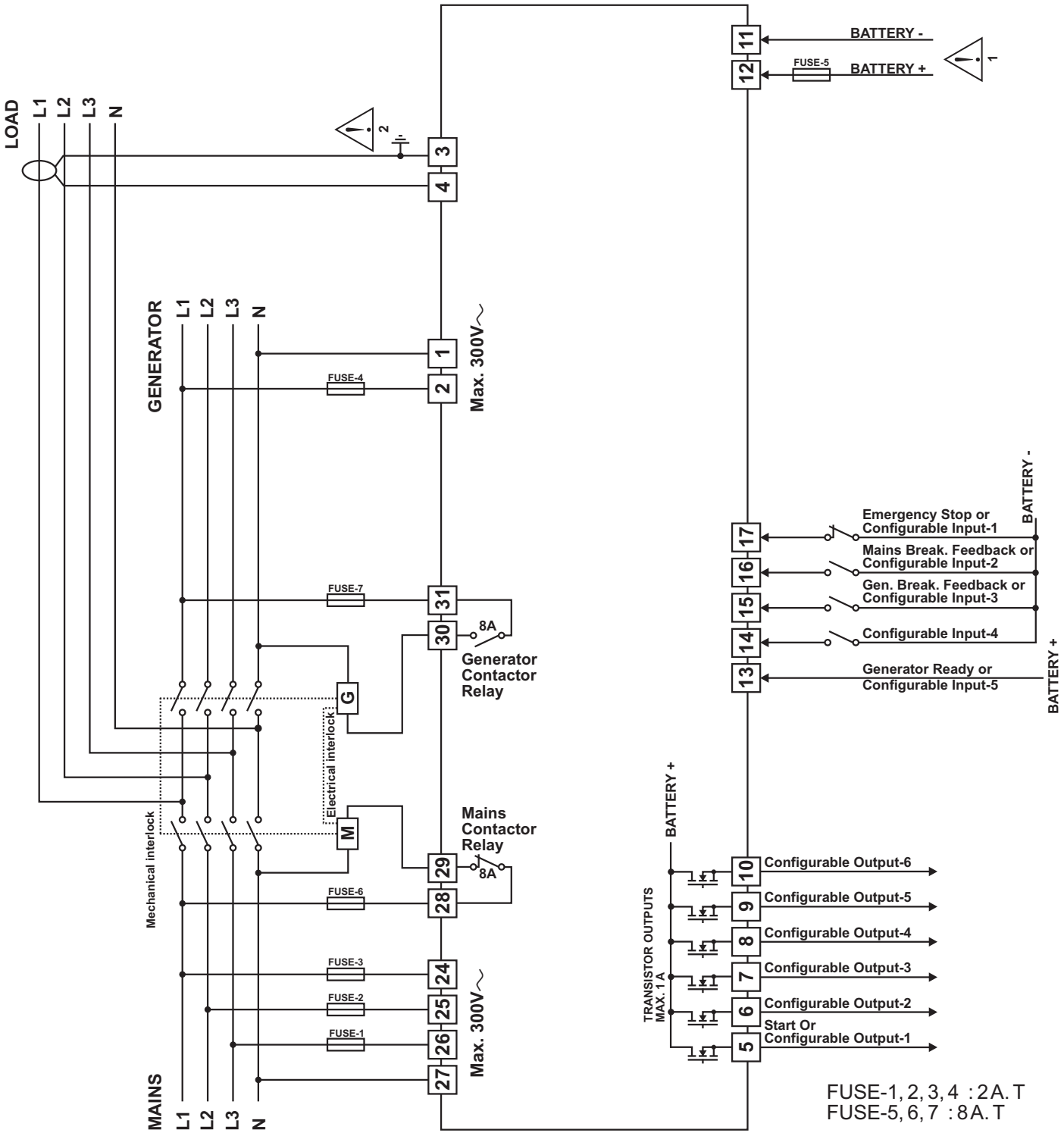


**1-** Connect the unit as shown in the appropriate diagram. Be sure to connect the battery supply the right way round and battery negative should be grounded. External fuse is recommended. Stranded cable cross section: 1,5mm², Solid cable cross section: 2,5mm², The stripping length is 7 to 9 mm. Supply cables must comply with the requirements of IEC 60277 or IEC 60245.

**2-** Current transformers secondary should be grounded. The CT of 5VA is recommended. The unit has a burden of 0.5VA on the CT.

# 3. Changing And Saving Parameters Values

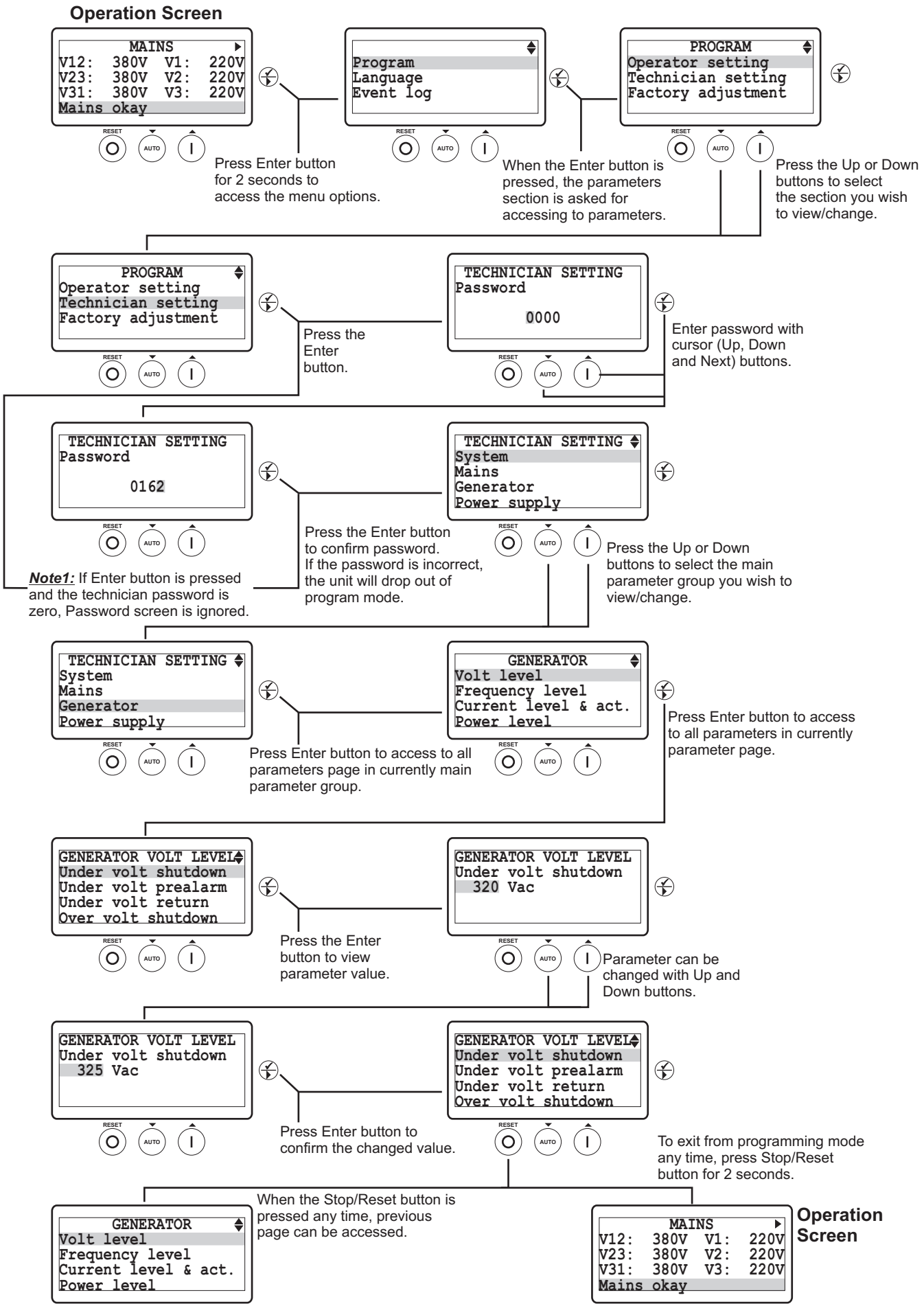

# 4. Parameters

## 4.1 Operator Parameters

### 4.1.1 Mains

| MAINS VOLT LEVEL (*Mains->Volt level*) | | Min | Max | Default | Unit |
|---|---|---|---|---|---|
| **Under volt trip** | Mains Under Voltage | 60 | 600 | 320 | V~ |
| **Under volt reset** | Mains Under Voltage Return | 60 | 600 | 340 | V~ |
| **Over volt trip** | Mains Over Voltage | 60 | 600 | 440 | V~ |
| **Over volt reset** | Mains Over Voltage Return | 60 | 600 | 420 | V~ |

| MAINS FREQ. LEVEL (*Mains->*Frequency *level*) | | Min | Max | Default | Unit |
|---|---|---|---|---|---|
| **Under freq trip** | Mains Under Frequency | 20.0 | 75.0 | 45.0 | Hz |
| **Under freq reset** | Mains Under Frequency Return | 20.0 | 75.0 | 48.0 | Hz |
| **Over freq trip** | Mains Over Frequency | 20.0 | 75.0 | 55.0 | Hz |
| **Over freq reset** | Mains Over Frequency Return | 20.0 | 75.0 | 52.0 | Hz |

### 4.1.2 Generator

| GENERATOR VOLT LEVEL (*Generator->Volt level*) | | Min | Max | Default | Unit |
|---|---|---|---|---|---|
| **Under volt shutdown** | Generator Under Voltage Shutdown | 60(dis) | 600 | 320 | V~ |
| **Under volt prealarm** | Generator Under Voltage Pre-Alarm | 60(dis) | 600 | 340 | V~ |
| **Under volt reset** | Generator Under Voltage Pre-Alarm Return | 60 | 600 | 350 | V~ |
| **Over volt shutdown** | Generator Over Voltage Shutdown | 60 | 600 | 440 | V~ |
| **Over volt prealarm** | Generator Over Voltage Pre-Alarm | 60(dis) | 600 | 420 | V~ |
| **Over volt reset** | Generator Over Voltage Pre-Alarm Return | 60 | 600 | 400 | V~ |
| **Shutdown delay time** | Generator Voltage Shutdown Delay Time | 0.0 | 10.0 | 1.0 | Sec |

| GENERATOR FREQ LEVEL (*Generator->Frequency level*) | | Min | Max | Default | Unit |
|---|---|---|---|---|---|
| **Under freq shutdown** | Generator Under Frequency Shutdown | 30.0(dis) | 75.0 | 43.0 | Hz |
| **Under freq prealarm** | Generator Under Frequency Pre-Alarm | 30.0(dis) | 75.0 | 45.0 | Hz |
| **Under freq reset** | Generator Under Frequency Pre-Alarm Return | 30.0 | 75.0 | 46.0 | Hz |
| **Over freq shutdown** | Generator Over Frequency Shutdown | 30.0(dis) | 75.0 | 58.0 | Hz |
| **Over freq prealarm** | Generator Over Frequency Pre-Alarm | 30.0(dis) | 75.0 | 55.0 | Hz |
| **Over freq reset** | Generator Over Frequency Pre-Alarm Return | 30.0 | 75.0 | 54.0 | Hz |
| **Shutdown delay time** | Generator Frequency Shutdown Delay Time | 0.0 | 10.0 | 1.0 | Sec |

| GENERATOR CUR LEVEL (*Generator->Current level*) | | Min | Max | Default | Unit |
|---|---|---|---|---|---|
| **Under cur. set** | Generator Under Current Set | 0 | 9999 | 1 | A~ |
| **Under cur. prealarm** | Generator Under Current Pre-Alarm | 0(dis) | 9999 | dis | A~ |
| **Under cur. reset** | Generator Under Current Pre-Alarm Return | 0 | 9999 | 5 | A~ |
| **Over cur. set** | Generator Over Current Set | 0 | 9999 | 9999 | A~ |
| **Over cur. prealarm** | Generator Over Current Pre-Alarm | 0(dis) | 9999 | 9990 | A~ |
| **Over cur. reset** | Generator Over Current Pre-Alarm Return | 0 | 9999 | 9980 | A~ |

**Note:** dis = disable

| GEN POWER LEVEL (*Generator->Power level*) | | Min | Max | Default | Unit |
|---|---|---|---|---|---|
| **Under power shutdown** | Generator Under Power Shutdown | 0(dis) | 9999 | dis | kVA |
| **Under power prealarm** | Generator Under Power Pre-Alarm | 0(dis) | 9999 | dis | kVA |
| **Under power reset** | Generator Under Power Pre-Alarm Return | 0 | 9999 | 5 | kVA |
| **Over power shutdown** | Generator Over Power Shutdown | 0(dis) | 9999 | dis | kVA |
| **Over power prealarm** | Generator Over Power Pre-Alarm | 0(dis) | 9999 | dis | kVA |
| **Over power reset** | Generator Over Power Pre-Alarm Return | 0 | 9999 | 0 | kVA |
| **Shutdown delay time** | Generator Power Shutdown Delay Time | 0 | 99 | 2 | Sec |
| **Reverse power set** | Reverse Power Set | -9999 | 0 | 0 | kW |

| GEN WORKING CALENDAR (*Generator->Working calendar*) | | Min | Max | Default | Unit |
|---|---|---|---|---|---|
| **Disable/enable select** | Working Calendar Disable or Enable | DISBL/ENABL | | DISBL | |
| **Start time on monday** | Working Calendar Work Start Time on Monday | 0.00 | 23.59 | 0.00 | H.Min |
| **Stop time on monday** | Working Calendar Work Stop Time on Monday | 0.00 | 23.59 | 23.59 | H.Min |
| **Start time on tues.** | Working Calendar Work Start Time on Tuesday | 0.00 | 23.59 | 0.00 | H.Min |
| **Stop time on tuesday** | Working Calendar Work Stop Time on Tuesday | 0.00 | 23.59 | 23.59 | H.Min |
| **Start time on wednes.** | Working Calendar Work Start Time on Wednesday | 0.00 | 23.59 | 0.00 | H.Min |
| **Stop time on wednes.** | Working Calendar Work Stop Time on Wednesday | 0.00 | 23.59 | 23.59 | H.Min |
| **Start time on thurs.** | Working Calendar Work Start Time on Thursday | 0.00 | 23.59 | 0.00 | H.Min |
| **Stop time on thursday** | Working Calendar Work Stop Time on Thursday | 0.00 | 23.59 | 23.59 | H.Min |
| **Start time on friday** | Working Calendar Work Start Time on Friday | 0.00 | 23.59 | 0.00 | H.Min |
| **Stop time on friday** | Working Calendar Work Stop Time on Friday | 0.00 | 23.59 | 23.59 | H.Min |
| **Start time on satur.** | Working Calendar Work Start Time on Saturday | 0.00 | 23.59 | 0.00 | H.Min |
| **Stop time on saturday** | Working Calendar Work Stop Time on Saturday | 0.00 | 23.59 | 23.59 | H.Min |
| **Start time on sunday** | Working Calendar Work Start Time on Sunday | 0.00 | 23.59 | 0.00 | H.Min |
| **Stop time on sunday** | Working Calendar Work Stop Time on Sunday | 0.00 | 23.59 | 23.59 | H.Min |

## 4.2 Technician Parameters

### 4.2.1 System

| SYSTEM NETWORK (*System->Network*) | | Min | Max | Default | Unit |
|---|---|---|---|---|---|
| **CT ratio** | Current Transformer Ratio | 5 | 9999 | 100 | |
| **PT ratio** | Voltage Transformer Ratio | 1 | 50 | 1 | |
| **Type of AC system** | Select AC system; 0- 1 Phase 2 Wire<br>1- 3 Phase 4 Wire<br>2- 2 Phase 3 Wire L1-L2<br>3- 2 Phase 3 Wire L1-L3 | 0 | 3 | 1 | |
| **Generator kVA rating** | Generator kVA rating set | 0 | 9999 | 300 | kVA |

**Note-1 :** dis = disable

| BREAKERS (*System->Breakers*) | | Min | Max | Default | Unit |
|---|---|---|---|---|---|
| **Type of Breaker** | Hardware Breaker Selection | 0 | 2 | 0 | |
| **Gen.brk.cls.contact** | Gen Close Breaker Contact Type | NO / NC | | 0 | |
| **Gen.brk.cls.relay** | Gen Close Breaker Relay Type | NOR / PULS | | 0 | |
| **Gen.brk.cls.time** | Gen Close Timer | 1 | 250 | 5 | Sec |
| **Gen.brk.open relay** | Gen Open Breaker Relay Type | NOR / PULS | | 0 | |
| **Gen.brk.open time** | Gen Open Timer | 1 | 250 | 5 | Sec |
| **Mains.brk.cls.contact** | Mains Close Breaker Contact Type | NO / NC | | 0 | |
| **Mains.brk.cls.relay** | Mains Close Breaker Relay Type | NOR / PULS | | 0 | |
| **Mains.brk.cls.time** | Mains Close Timer | 1 | 250 | 5 | Sec |
| **Mains.brk.open relay** | Mains Open Breaker Relay Type | NOR / PULS | | 0 | |
| **Mains.brk.open time** | Mains Open Timer | 1 | 250 | 5 | Sec |
| **Break.close puls.time** | Breaker Close Pulse Time | 0.0 | 10.0 | 0.5 | Sec |
| **Break.open pulse time** | Breaker Open Pulse Time | 0.0 | 10.0 | 0.5 | Sec |
| **Transfer time** | Transfer Time | 0 | 250 | 2 | Sec |
| **Spring loading time** | Spring Loading Time | 1 | 250 | 3 | Sec |
| **Retry number** | Retry Number | 1 | 250 | 5 | |

| LCD DISPLAY (*System->LCD display*) | | Min | Max | Default | Unit |
|---|---|---|---|---|---|
| **Language*1** | Language Selection | ENGLISH/CHINESE | | ENGLISH | |
| **Contrast** | Digital Contrast | 4 | 9 | 5 | |
| **Auto backlight off** | Auto Backlight Off | DISBL/ENABL | | DISBL | |
| **Auto scroll time** | Auto Scroll Time | 0 (dis) | 250 | 0 | Sec |
| **Auto scroll number** | Auto Scroll Number | 1 | 8 | 3 | |
| **Err. mesg scroll time** | Scroll Time For Error Messages | 1 | 250 | 2 | Sec |

| COMMUNICATION (*System->Communication*) | | Min | Max | Default | Unit |
|---|---|---|---|---|---|
| **Slave address** | Slave Address | 1 | 247 | 1 | |
| **Baud rate** | Baud Rate<br>0 - 1200 baud<br>1 - 2400 baud<br>2 - 4800 baud<br>3 - 9600 baud<br>4 - 19200 baud<br>5 - 38400 baud | 0 | 5 | 3 | |
| **Parity** | Parity<br>0 - NONE<br>1 - ODD<br>2 - EVEN | 0 | 2 | 0 | |
| **Stop bit** | Stop Bit (0-> 1 stop bit,1-> 2 stop bit) | 0 | 1 | 0 | |

**Note:** *1 = Selectable value of this parameter is “ENGLISH/TURKISH” at Trans-MiniATS (TR) devices.
NO / NC : Normally Open / Normally Close
NOR / PULS : Normal / Pulse
dis = disable

| DATE & TIME SET (*System->Date & time set*) | | Min | Max | Default | Unit |
|---|---|---|---|---|---|
| **Year** | Year | 0 | 99 | | |
| **Month** | Month | 1 | 12 | | |
| **Day** | Date | 1 | 31 | | |
| **Week** | Day of week | 1 | 7 | | |
| **Hour** | Hour | 0 | 23 | | |
| **Minute** | Minute | 0 | 59 | | |
| **Second** | Second | 0 | 59 | | |

| DEFAULT SETTINGS (*System->Default settings*) | | Min | Max | Default | Unit |
|---|---|---|---|---|---|
| **Save setting to def.** | Save setting to default | YES / NO | | NO | |
| **Reset default sets** | Reset default sets | YES / NO | | NO | |
| **Reset factory sets** | Reset factory sets | YES / NO | | NO | |

| PASSWORD SETTINGS (*System->Password settings*) | | Min | Max | Default | Unit |
|---|---|---|---|---|---|
| **Operator password** | Operator Password | 0 | 9999 | 0 | |
| **Technician password** | Technician Password | 0 | 9999 | 0 | |

## 4.2.2 Mains

| MAINS VOLT LEVEL (*Mains->Volt level*) | | Min | Max | Default | Unit |
|---|---|---|---|---|---|
| **Under volt trip** | Mains Under Voltage | 60 | 600 | 320 | V~ |
| **Under volt reset** | Mains Under Voltage Return | 60 | 600 | 340 | V~ |
| **Over volt trip** | Mains Over Voltage | 60 | 600 | 440 | V~ |
| **Over volt reset** | Mains Over Voltage Return | 60 | 600 | 420 | V~ |

| MAINS FREQ. LEVEL (*Mains->*Frequency *level*) | | Min | Max | Default | Unit |
|---|---|---|---|---|---|
| **Under freq trip** | Mains Under Frequency | 20.0 | 75.0 | 45.0 | Hz |
| **Under freq reset** | Mains Under Frequency Return | 20.0 | 75.0 | 48.0 | Hz |
| **Over freq trip** | Mains Over Frequency | 20.0 | 75.0 | 55.0 | Hz |
| **Over freq reset** | Mains Over Frequency Return | 20.0 | 75.0 | 52.0 | Hz |

| MAINS ACTIONS (*Mains->*Actions) | | Min | Max | Default | Unit |
|---|---|---|---|---|---|
| **Mains failure detect** | Mains Failure Detection En/Dis | ENABL/DISBL | | ENABL | |
| **Mains fail.stop mode** | Look Mains Failure at Stop Mode En/Dis | ENABL/DISBL | | ENABL | |
| **Always return delay** | Always Look Mains Return Delay | ENABL/DISBL | | DISBL | |

## 4.2.3 Generator

| GENERATOR VOLT LEVEL (*Generator->Volt level*) | | Min | Max | Default | Unit |
|---|---|---|---|---|---|
| **Under volt shutdown** | Generator Under Voltage Shutdown | 60(dis) | 600 | 320 | V~ |
| **Under volt prealarm** | Generator Under Voltage Pre-Alarm | 60(dis) | 600 | 340 | V~ |
| **Under volt reset** | Generator Under Voltage Pre-Alarm Return | 60 | 600 | 350 | V~ |
| **Over volt shutdown** | Generator Over Voltage Shutdown | 60 | 600 | 440 | V~ |
| **Over volt prealarm** | Generator Over Voltage Pre-Alarm | 60(dis) | 600 | 420 | V~ |
| **Over volt reset** | Generator Over Voltage Pre-Alarm Return | 60 | 600 | 400 | V~ |
| **Shutdown delay time** | Generator Voltage Shutdown Delay Time | 0.0 | 10.0 | 1.0 | Sec |

**Note:** dis = disable

| GENERATOR FREQ LEVEL (*Generator->Frequency level*) | | Min | Max | Default | Unit |
|---|---|---|---|---|---|
| **Under freq shutdown** | Generator Under Frequency Shutdown | 30.0(dis) | 75.0 | 43.0 | Hz |
| **Under freq prealarm** | Generator Under Frequency Pre-Alarm | 30.0(dis) | 75.0 | 45.0 | Hz |
| **Under freq reset** | Generator Under Frequency Pre-Alarm Return | 30.0 | 75.0 | 46.0 | Hz |
| **Over freq shutdown** | Generator Over Frequency Shutdown | 30.0(dis) | 75.0 | 58.0 | Hz |
| **Over freq prealarm** | Generator Over Frequency Pre-Alarm | 30.0(dis) | 75.0 | 55.0 | Hz |
| **Over freq reset** | Generator Over Frequency Pre-Alarm Return | 30.0 | 75.0 | 54.0 | Hz |
| **Shutdown delay time** | Generator Frequency Shutdown Delay Time | 0.0 | 10.0 | 1.0 | Sec |

| GEN CUR LEVEL & ACT (*Generator->Current level & act.*) | | Min | Max | Default | Unit |
|---|---|---|---|---|---|
| **Under cur. set** | Generator Under Current Set | 0 | 9999 | 1 | A~ |
| **Under cur. prealarm** | Generator Under Current Pre-Alarm | 0(dis) | 9999 | dis | A~ |
| **Under cur. reset** | Generator Under Current Pre-Alarm Return | 0 | 9999 | 5 | A~ |
| **Under cur. act.** | Generator Under Current Actions<br>0 - Disable<br>1 - Warning (Alarm Only, No Shutdown)<br>2 - Electrical Trip (Alarm/Off Load Generator Followed By Shutdown After Cooling)<br>3 - Shutdown (Alarm And Shutdown) | 0(dis) | 3 | dis | |
| **Under act. delay time** | Generator Under Current Actions Delay Time | 0 | 99 | 2 | Sec |
| **Over cur. set** | Generator Over Current Set | 0 | 9999 | 9999 | A~ |
| **Over cur. prealarm** | Generator Over Current Pre-Alarm | 0(dis) | 9999 | 9990 | A~ |
| **Over cur. reset** | Generator Over Current Pre-Alarm Return | 0 | 9999 | 9980 | A~ |
| **Over cur. act.** | Generator Over Current Actions<br>0 - Disable<br>1 - Warning (Alarm Only, No Shutdown)<br>2 - Electrical Trip (Alarm/Off Load Generator Followed By Shutdown After Cooling)<br>3 - Shutdown (Alarm And Shutdown) | 0(dis) | 3 | dis | |
| **Over act. delay time** | Generator Over Current Actions Delay Time | 0 | 99 | 2 | Sec |
| **Short circuit cur.** | Generator Short Circuit Current Set | 0 | 9999 | 9999 | A~ |

| GEN POWER LEVEL (*Generator->Power level*) | | Min | Max | Default | Unit |
|---|---|---|---|---|---|
| **Under power shutdown** | Generator Under Power Shutdown | 0(dis) | 9999 | dis | kVA |
| **Under power prealarm** | Generator Under Power Pre-Alarm | 0(dis) | 9999 | dis | kVA |
| **Under power reset** | Generator Under Power Pre-Alarm Return | 0 | 9999 | 5 | kVA |
| **Over power shutdown** | Generator Over Power Shutdown | 0(dis) | 9999 | dis | kVA |
| **Over power prealarm** | Generator Over Power Pre-Alarm | 0(dis) | 9999 | dis | kVA |
| **Over power reset** | Generator Over Power Pre-Alarm Return | 0 | 9999 | 0 | kVA |
| **Shutdown delay time** | Generator Power Shutdown Delay Time | 0 | 99 | 2 | Sec |
| **Reverse power set** | Reverse Power Set | -9999 | 0 | 0 | kW |
| **Reverse power act.** | Reverse Power Actions<br>0 - Disable<br>1 - Warning (Alarm Only, No Shutdown)<br>2 - Electrical Trip (Alarm/Off Load Generator Followed By Shutdown After Cooling)<br>3 - Shutdown (Alarm And Shutdown) | 0(dis) | 3 | 0(dis) | |
| **Rv.pow.act.delay time** | Reverse Power Action Delay Time | 0 | 99 | 2 | Sec |

**Note:** dis = disable

| GEN WORKING CALENDAR (*Generator->Working calendar*) | | Min | Max | Default | Unit |
|---|---|---|---|---|---|
| **Disable/enable select** | Working Calendar Disable or Enable | DISBL/ENABL | | DISBL | |
| **Start time on monday** | Working Calendar Work Start Time on Monday | 0.00 | 23.59 | 0.00 | H.Min |
| **Stop time on monday** | Working Calendar Work Stop Time on Monday | 0.00 | 23.59 | 23.59 | H.Min |
| **Start time on tues.** | Working Calendar Work Start Time on Tuesday | 0.00 | 23.59 | 0.00 | H.Min |
| **Stop time on tuesday** | Working Calendar Work Stop Time on Tuesday | 0.00 | 23.59 | 23.59 | H.Min |
| **Start time on wednes.** | Working Calendar Work Start Time on Wednesday | 0.00 | 23.59 | 0.00 | H.Min |
| **Stop time on wednes.** | Working Calendar Work Stop Time on Wednesday | 0.00 | 23.59 | 23.59 | H.Min |
| **Start time on thurs.** | Working Calendar Work Start Time on Thursday | 0.00 | 23.59 | 0.00 | H.Min |
| **Stop time on thursday** | Working Calendar Work Stop Time on Thursday | 0.00 | 23.59 | 23.59 | H.Min |
| **Start time on friday** | Working Calendar Work Start Time on Friday | 0.00 | 23.59 | 0.00 | H.Min |
| **Stop time on friday** | Working Calendar Work Stop Time on Friday | 0.00 | 23.59 | 23.59 | H.Min |
| **Start time on satur.** | Working Calendar Work Start Time on Saturday | 0.00 | 23.59 | 0.00 | H.Min |
| **Stop time on saturday** | Working Calendar Work Stop Time on Saturday | 0.00 | 23.59 | 23.59 | H.Min |
| **Start time on sunday** | Working Calendar Work Start Time on Sunday | 0.00 | 23.59 | 0.00 | H.Min |
| **Stop time on sunday** | Working Calendar Work Stop Time on Sunday | 0.00 | 23.59 | 23.59 | H.Min |

| GENERATOR GENERAL (*Generator->General*) | | Min | Max | Default | Unit |
|---|---|---|---|---|---|
| **Sens.option gen.freq** | Sensing Options Generator Frq En/Dis | ENABL/DISBL | | ENABL | |
| **All warning are latch** | All Warnings Are Latched En/Dis | ENABL/DISBL | | DISBL | |

## 4.2.4 Power Supply

| POWER SUPPLY BATTERY (Power Supply->*Battery*) | | Min | Max | Default | Unit |
|---|---|---|---|---|---|
| **Under volt** | Battery Undervolts Warning | 6.0(dis) | 30.0 | 10.0 | V⎓ |
| **Under volt reset** | Battery Undervolts Warning Return | 6.0 | 30.0 | 10.5 | V⎓ |
| **Under volt delay** | Battery Undervolts Volts Delay | 0.0 | 9.9 | 1.0 | Sec |
| **Over volt** | Battery Overvolts Warning | 6.0(dis) | 30.0 | 30.0 | V⎓ |
| **Over volt reset** | Battery Overvolts Warning Return | 6.0 | 30.0 | 29.5 | V⎓ |
| **Over volt delay** | Battery Overvolts Delay | 0.0 | 9.9 | 1.0 | Sec |

## 4.2.5 Engine

| LOAD TEST (*Engine->Load test*) | | Min | Max | Default | Unit |
|---|---|---|---|---|---|
| **Disable/enable select** | Disable, No Load or On Load Selection | 0-DISABLE<br>1-NO LOAD<br>2-ON LOAD | | 1-NO LOAD | |

| EXERCISE (*Engine->Exercise*) | | Min | Max | Default | Unit |
|---|---|---|---|---|---|
| **Time of period** | Generator exercise working period on related day | 0(dis) | 99 | dis | Min |
| **Week** | Generator exercise working day of week | 1 | 7 | 1 | |
| **Start time** | Generator exercise work start time on related day | 0.0 | 23.59 | 0.00 | H.Min |

| ENGINE GENERAL (*Engine->General*) | | Min | Max | Default | Unit |
|---|---|---|---|---|---|
| **Engine running volt** | Engine running voltage | 60(dis) | 600 | 300 | V~ |
| **Engine running freq.** | Engine running frequency | 25.0 | 75.0 | 30.0 | Hz |

**Note:** dis = disable

## 4.2.6 Inputs

| CONF. INPUT-X (*Inputs->Conf. input-x*) | | Min | Max | Default | Unit |
|---|---|---|---|---|---|
| **Dis,user conf.or list** | 0- Disable<br>1- User Configured<br>2- Select From List | 0(dis) | 2 | in1=2<br>in2, 3=0<br>in4=0<br>in5=2 | |
| **Polarity** | 0- Normally Open (Close To Activate)<br>1- Normally Close (Open To Activate) | 0 | 1 | in1=1<br>in2, 3=0<br>in4, 5=0 | |
| **Indication** | If User Configured<br>0- Status<br>1- Warning Non-Latching<br>2- Warning Latching<br>3- Electrical Trip<br>4- Shutdown | 0 | 4 | in1=0<br>in2=0<br>In3=0<br>in4=0<br>In5=0 | |
| **Activation** | If User Configured<br>0- Active From Starting<br>1- Active From Safety On<br>2- Always Active | 0 | 2 | in1=2<br>in2=2<br>in3=2<br>in4=2<br>in5=2 | |
| **Select from list** | If Select From List<br>0-Remote Start On Load<br>1-Remote Start Off Load<br>2-Auxiliary Mains Fail<br>3-Reserved<br>4-Reserved<br>5-Reserved<br>6-Simulate Auto Button<br>7-Simulate Test Button<br>8-Reserved<br>9-Simulate Start Button<br>10-Simulate Stop Button<br>11-Generator Closed Auxiliary<br>12-Generator Load Inhibit<br>13-Mains Closed Auxiliary<br>14-Mains Load Inhibit<br>15-Auto Restore Inhibit<br>16-Auto Start Inhibit<br>17-Panel Lock<br>18-Scheduled Runs(Exercise) Inhibited<br>19-Reserved<br>20-Reserved<br>21-Reserved<br>22-Remote Inhibit<br>23-Engine Running<br>24-Generator Ready<br>25-Emergency Stop | 0 | 25 | in1=25<br>in2=13<br>in3=11<br>in4=23<br>in5=24 | |
| **Active delay** | Input active delay | 0 | 250 | in1=0<br>in2, 3=1<br>in4, 5=1 | Sec |

**Note-1 :** x = 1(input-1), 2(input-2), 3(input-3), 4(input-4) or 5(input-5)

**Note-2 :** dis = disable

## 4.2.7 Outputs

| CONF. OUTPUT-1 (*Outputs->Conf. output-1*) | | Min | Max | Default | Unit |
|---|---|---|---|---|---|
| **Polarity** | 0- Normally Open (Close To Activate)<br>1- Normally Close (Open To Activate) | 0 | 1 | 0 | |
| **Function** | 0-NOT USED<br>1-AIR FLAP CONTROL<br>2-ALARM RESET<br>3-AUDIBLE ALARM<br>4-AUTO START INHIBIT<br>5-AUXILIARY MAINS FAILURE<br>6-BATTERY HIGH VOLTAGE<br>7-BATTERY LOW VOLTAGE<br>8-CALLING FOR SCHEDULED RUN(EXERCISE)<br>9-RESERVED<br>10-RESERVED<br>11-RESERVED<br>12-COMMON ALARM<br>13-COMMON ELECTRICAL TRIP ALARM<br>14-COMMON SHUTDOWN ALARM<br>15-COMMON WARNING ALARM<br>16-RESERVED<br>17-RESERVED<br>18-RESERVED<br>19-RESERVED<br>20-COOLING DOWN TIMER IN PROGRESS<br>21-RESERVED<br>22-DELAYED ALARMS ACTIVE<br>23-DIGITAL INPUT1 ALARM<br>24-DIGITAL INPUT2 ALARM<br>25-DIGITAL INPUT3 ALARM<br>26-DIGITAL INPUT4 ALARM<br>27-DIGITAL INPUT5 ALARM<br>28-RESERVED<br>29-RESERVED<br>30-RESERVED<br>31-RESERVED<br>32-RESERVED<br>33-RESERVED<br>34-RESERVED<br>35-RESERVED<br>36-RESERVED<br>37-RESERVED<br>38-RESERVED<br>39-EMERGENCY STOP<br>40-FAIL TO START ALARM<br>41-FAIL TO STOP ALARM<br>42-RESERVED<br>43-RESERVED<br>44-RESERVED<br>45-GENERATOR AT REST<br>46-GENERATOR AVAILABLE<br>47-GENERATOR CLOSED AUXILIARY<br>48-GENERATOR FAILED TO CLOSE<br>49-GENERATOR FAILED TO OPEN<br>50-GENERATOR HIGH FREQUENCY PRE-ALARM<br>51-GENERATOR HIGH FREQUENCY SHUTDOWN<br>52-GENERATOR HIGH VOLTAGE PRE-ALARM<br>53-GENERATOR HIGH VOLTAGE SHUTDOWN<br>54-GENERATOR LOAD INHIBIT<br>55-GENERATOR LOW FREQUENCY PRE-ALARM<br>56-GENERATOR LOW FREQUENCY SHUTDOWN<br>57-GENERATOR LOW VOLTAGE PRE-ALARM<br>58-GENERATOR LOW VOLTAGE SHUTDOWN<br>59-GENERATOR STOPPING<br>60-GENERATOR OPEN BREAKER<br>61-HORN OUTPUT LATCHED<br>62-HORN OUTPUT PULSED<br>63-LAMP TEST<br>64-RESERVED<br>65-RESERVED<br>66-RESERVED<br>67-RESERVED<br>68-MAINS CLOSED AUXILIARY<br>69-MAINS FAILED TO CLOSE<br>70-MAINS FAILED TO OPEN<br>71-MAINS FAILURE<br>72-MAINS HIGH FREQUENCY<br>73-MAINS HIGH VOLTAGE<br>74-MAINS LOAD INHIBIT<br>75-MAINS LOW FREQUENCY<br>76-MAINS LOW VOLTAGE<br>77-MAINS OPEN BREAKER<br>78-NO LOADING COMMAND<br>79-RESERVED<br>80-RESERVED<br>81-RESERVED<br>82-RESERVED<br>83-OVER CURRENT PRE-ALARM<br>84-OVER CURRENT<br>85-OVER POWER PRE-ALARM<br>86-OVER POWER SHUTDOWN<br>87-RESERVED<br>88-RESERVED<br>89-PANEL LOCK<br>90-RESERVED<br>91-RESERVED<br>92-RESERVED<br>93-RESERVED<br>94-REMOTE START PRESENT<br>95-RESERVED<br>96-SHORT CIRCUIT<br>97-RESERVED<br>98-RESERVED<br>99-STARTING ALARMS ARMED<br>100-RESERVED<br>101-SYSTEM IN AUTO MODE<br>102-SYSTEM IN MANUAL MODE<br>103-SYSTEM IN STOP MODE<br>104-SYSTEM IN TEST MODE<br>105-UNDER CURRENT PRE-ALARM<br>106-UNDER CURRENT<br>107-UNDER POWER PRE-ALARM<br>108-UNDER POWER SHUTDOWN<br>109-RESERVED<br>110-RESERVED<br>111-WAITING FOR GENERATOR<br>112-REVERSE POWER<br>113-LOAD SUPPLY FROM GENERATOR<br>114-LOAD SUPPLY FROM MAINS<br>115-RESERVED<br>116-RESERVED<br>117-RESERVED<br>118-RESERVED<br>119-RESERVED<br>120-RESERVED<br>121-RESERVED<br>122-REMOTE CONTROL ACTIVE | 0 | 122 | 94 | |

| CONF. OUTPUT-2 (*Outputs->Conf. output-2*) | | Min | Max | Default | Unit |
|---|---|---|---|---|---|
| **Polarity** | 0- Normally Open (Close To Activate)<br>1- Normally Close (Open To Activate) | 0 | 1 | 0 | |
| **Function** | The same as Configurable Output-1 options | 0 | 122 | 21 | |

| CONF. OUTPUT-3 (*Outputs->Conf. output-3*) | | Min | Max | Default | Unit |
|---|---|---|---|---|---|
| **Polarity** | 0- Normally Open (Close To Activate)<br>1- Normally Close (Open To Activate) | 0 | 1 | 0 | |
| **Function** | The same as Configurable Output-1 options | 0 | 122 | 62 | |

| CONF. OUTPUT-4 (*Outputs->Conf. output-4*) | | Min | Max | Default | Unit |
|---|---|---|---|---|---|
| **Polarity** | 0- Normally Open (Close To Activate)<br>1- Normally Close (Open To Activate) | 0 | 1 | 0 | |
| **Function** | The same as Configurable Output-1 options | 0 | 122 | 12 | |

| CONF. OUTPUT-5 (*Outputs->Conf. output-5*) | | Min | Max | Default | Unit |
|---|---|---|---|---|---|
| **Polarity** | 0- Normally Open (Close To Activate)<br>1- Normally Close (Open To Activate) | 0 | 1 | 0 | |
| **Function** | The same as Configurable Output-1 options | 0 | 122 | 13 | |

| CONF. OUTPUT-6 (*Outputs->Conf. output-6*) | | Min | Max | Default | Unit |
|---|---|---|---|---|---|
| **Polarity** | 0- Normally Open (Close To Activate)<br>1- Normally Close (Open To Activate) | 0 | 1 | 0 | |
| **Function** | The same as Configurable Output-1 options | 0 | 122 | 14 | |

### 4.2.8 Timers

| START TIMERS (*Timers->Start timers*) | | Min | Max | Default | Unit |
|---|---|---|---|---|---|
| **Mains transient delay** | Mains Transient Delay | 0.0 | 20.0 | 2.0 | Sec |
| **Mains fail start dely** | Mains Fail Start Delay | 0 | 9999 | 0 | Sec |
| **Remote start delay** | Remote Start Delay | 0 | 3600 | 4 | Sec |
| **Gen. fail delay** | Generator Fail Delay | 0 | 250 | 45 | Sec |
| **Safety on delay** | Safety On Delay | 0 | 99 | 5 | Sec |
| **Warming up time** | Warmup Time | 0 | 250 | 3 | Sec |
| **Horn duration** | Horn Duration | 0 (dis) | 999 | 60 | Sec |

| STOPPING TIMERS (*Timers->Stopping timers*) | | Min | Max | Default | Unit |
|---|---|---|---|---|---|
| **Mains return delay** | Mains Return Delay | 0 | 3600 | 5 | Sec |
| **Remote stop delay** | Remote Stop Delay | 0 | 250 | 4 | Sec |
| **Cooling time** | Cooling Time | 0 (dis) | 3600 | 60 | Sec |
| **Fail to stop delay** | Fail To Stop Time | 15 | 999 | 30 | Sec |

**Note:** dis = disable cont = continuous

## 4.2.9 User Adjustment

| MAINS VOLTAGE OFFSET (*User adjustment->Mains voltage offset*) | | Min | Max | Default | Unit |
|---|---|---|---|---|---|
| **Mains V1 offset** | Mains V1 Offset | -20 | 20 | 0 | V~ |
| **Mains V2 offset** | Mains V2 Offset | -20 | 20 | 0 | V~ |
| **Mains V3 offset** | Mains V3 Offset | -20 | 20 | 0 | V~ |

| GEN. VOLTAGE OFFSET (*User adjustment->Gen. voltage offset*) | | Min | Max | Default | Unit |
|---|---|---|---|---|---|
| **Gen. V1 offset** | Generator V1 Offset | -20 | 20 | 0 | V~ |

| CURRENT OFFSET (*User adjustment->Current offset*) | | Min | Max | Default | Unit |
|---|---|---|---|---|---|
| **Current I1 offset** | Current I1 Offset | -20 | 20 | 0 | A~ |

| BATTERY OFFSET (*User adjustment->Battery Offset*) | | Min | Max | Default | Unit |
|---|---|---|---|---|---|
| **Batt.volt offset** | Battery Voltage Offset | -5.0 | 5.0 | 0 | V⎓ |

## 5. Specifications

| | |
|---|---|
| **Equipment use** | : Electrical control equipment for generating sets. |
| **Housing & Mounting** | :111 mm x 81 mm x 61 mm. (including connectors). Plastic housing for panel mounting. |
| **Panel Cut-Out** | : 81mm x 70mm. |
| **Protection Against Mech. Impacts** | : 1Joule (IK06). |
| **Protection Class** | : IP65 at front panel. |
| **Weight** | : Approximately 0,3 Kg. |
| **Environmental rating** | : Standard, indoor at an altitude of less then 2000 meters with non-condensing humidity. |
| **Operating/Storage Temperature** | : -20°C to +70°C / -30°C to +80°C |
| **Operating/Storage Humidity** | : 95 % max. (non-condensing) |
| **Vibration** | : EN 60068-2-6<br>Ten sweeps in each of three major axes<br>5Hz to 8Hz @ +/-7.5mm, 8Hz to 500Hz @ 2gn. |
| **Shock** | : EN 60068-2-27<br>Three shocks in each of three major axes<br>15gn in 11mS. |
| **Installation Over Volt. Category** | : II Appliances, portable equipment |
| **Pollution Degree** | : II, Normal office or workplace, non conductive pollution |
| **Mode of Operation** | : Continuous. |
| **Supply Voltage and Power** | : 8 to 32 V⎓ (Peak: 36 V⎓) - 3.2W |
| **Battery Voltage Measurement** | : 8 to 32 V ⎓, accuracy: 1 % FS, resolution: 0,1 V |
| **Mains Voltage Measurement** | : 10 to 300 VAC Ph-N, 5 to 99.9 Hz. Accuracy: 1 % FS, Resolution: 1 V, Harmonics: Up to $11^{th}$. |
| **Mains Frequency** | : 5 to 99.9Hz (min. 20 VAC Ph-N) Accuracy: 0,25 % FS, Resolution: 0,1 Hz. |
| **Generator Voltage Measurement** | : 10 to 300 VAC Ph-N, 5 to 99.9 Hz. Accuracy: 1 % FS, Resolution: 1 V, Harmonics: Up to $11^{th}$. |
| **Generator Frequency** | : 5 to 99.9Hz (min. 20 VAC Ph-N) Accuracy: 0,25 % FS, Resolution: 0,1 Hz. |
| **CT secondary** | : 5A. |
| **Communication interface** | : RS-232 |
| **Relay Outputs** | : Generator contactor relay output 8A@250V~<br>Mains contactor relay output 8A@250V~ |
| **Transistor Outputs** | : Start or Configurable output-1 1A at DC supply voltage<br>Configurable output-2 1A at DC supply voltage<br>Configurable output-3 1A at DC supply voltage<br>Configurable output-4 1A at DC supply voltage<br>Configurable output-5 1A at DC supply voltage<br>Configurable output-6 1A at DC supply voltage<br>All transistor ouputs supplied from DC supply terminal 12 |
| **Approvals** | : EAC , CE |

## 6. Other Informations

**Manufacturer Information:**
Emko Elektronik Sanayi ve Ticaret A.Ş.
Bursa Organize Sanayi Bölgesi, (Fethiye OSB Mah.)
Ali Osman Sönmez Bulvarı 2. Sokak, No:3
16215 Nilüfer - BURSA / TÜRKİYE
Phone : +90 224 261 19 00
Fax : +90 224 261 19 12

**Repair and maintenance service information:**
Emko Elektronik Sanayi ve Ticaret A.Ş.
Bursa Organize Sanayi Bölgesi, (Fethiye OSB Mah.)
Ali Osman Sönmez Bulvarı 2. Sokak, No:3
16215 Nilüfer - BURSA / TÜRKİYE
Phone : +90 224 261 19 00
Fax : +90 224 261 19 12

## 7. Order Information

**Trans-MiniATS** : Automatic Transfer Switch

**Note:** Devices have time clock. If real time clock is needed, “RTC” expression must be added to end of order code.
Example: Trans-MiniATS.RTC






https://www.emkoelektronik.com.tr/en/products/trans-miniats

EMKO
Your Technology Partner

*Thank you very much for your preference to use Emko Elektronik products, please visit our web page to download detailed user manual.*

***www.emkoelektronik.com.tr***



**PRC Technologies Corp., Ltd. ลาดพร้าว 101 กรุงเทพ 10240**
**โทรศัพท์ : 02 530 1714, 02 932 1711 มือถือ : 086 360 8600**
**อีเมล : contact@prctech.net LINE ID1 : prctec-info, LINE ID2 : @prct**