

TRANS-MINIPUMP

AUTOMATIC PUMP CONTROL UNIT

1.Introduction

1.1 General Specifications

The unit provides automatic start and stop the engine and protect the pump system. Both automatic and manual control is possible. A test mode is also available which allows the pump to be run for checking the pump system.

The unit calculates engine RPM from Magnetic Pickup sensor input.

The unit is extensively programmable through the front panel, with password protection on two levels. Operational parameters can also be monitored and controlled from a PC via a built-in RS-232 communication port.

In the event that the engine fails to start on the first attempt, the attempt will be repeated a programmed number of times or until successful.

1.2 Warranty

EMKO Elektronik warrants that the equipment delivered is free from defects in material and workmanship. This warranty is provided for a period of two years. The warranty period starts from the delivery date. This warranty is in force if duty and responsibilities which are determined in warranty document and instruction manual performs by the customer completely.

1.3 Maintenance

Repairs should only be performed by trained and specialized personnel. Cut power to the device before accessing internal parts.
Do not clean the case with hydrocarbon-based solvents (Petrol, Trichlorethylene etc.). Use of these solvents can reduce the mechanical reliability of the device. Use a cloth dampened in ethyl alcohol or water to clean the external plastic case.

2. Installation

Before beginning installation of this product, please read the instruction manual and warnings below carefully.

A visual inspection of this product for possible damage occured during shipment is recommended before installation. It is your responsibility to ensure that qualified mechanical and electrical technicians install this product.

If there is danger of serious accident resulting from a failure or defect in this unit , power off the system and seperate the electrical connection of the device from the system.

Keep the power off until all of the wiring is completed so that electric shock and trouble with the unit can be prevented.

2.1 Unit Configuration

The unit can be programmed using the buttons and LCD display on the front panel or PC Software.

2.2 Panel Mounting

The unit is designed for panel mounting. Fixing is by two screw fixings.
1- Insert the unit in the panel cut-out from the front.
2- Insert the fixings in the slotted at the corners of the unit and tighten the fixing screws to secure the unit against the panel.

During the equipment is putted in hole on the metal panel while mechanical installation some metal burrs can cause injury on hands, you must be careful.

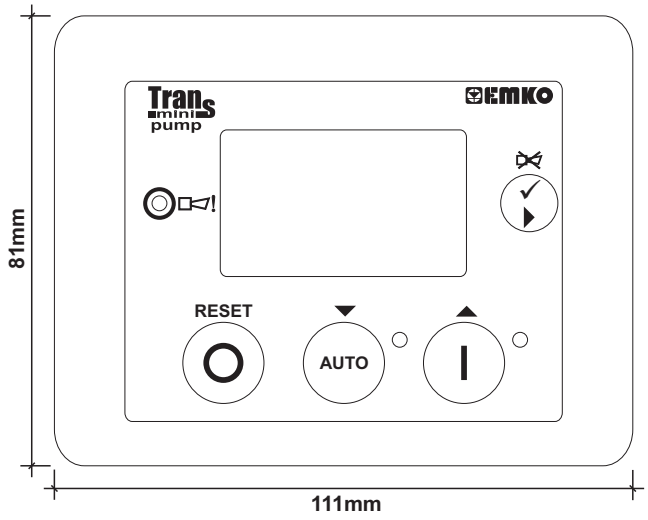

Figure 2.1 Front View

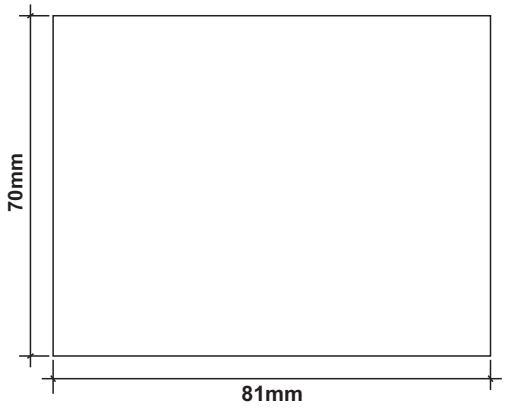

Figure 2.2 Panel Cut-Out

2.3 Electrical Connection

TRANS-MINIPUMP connections schematic

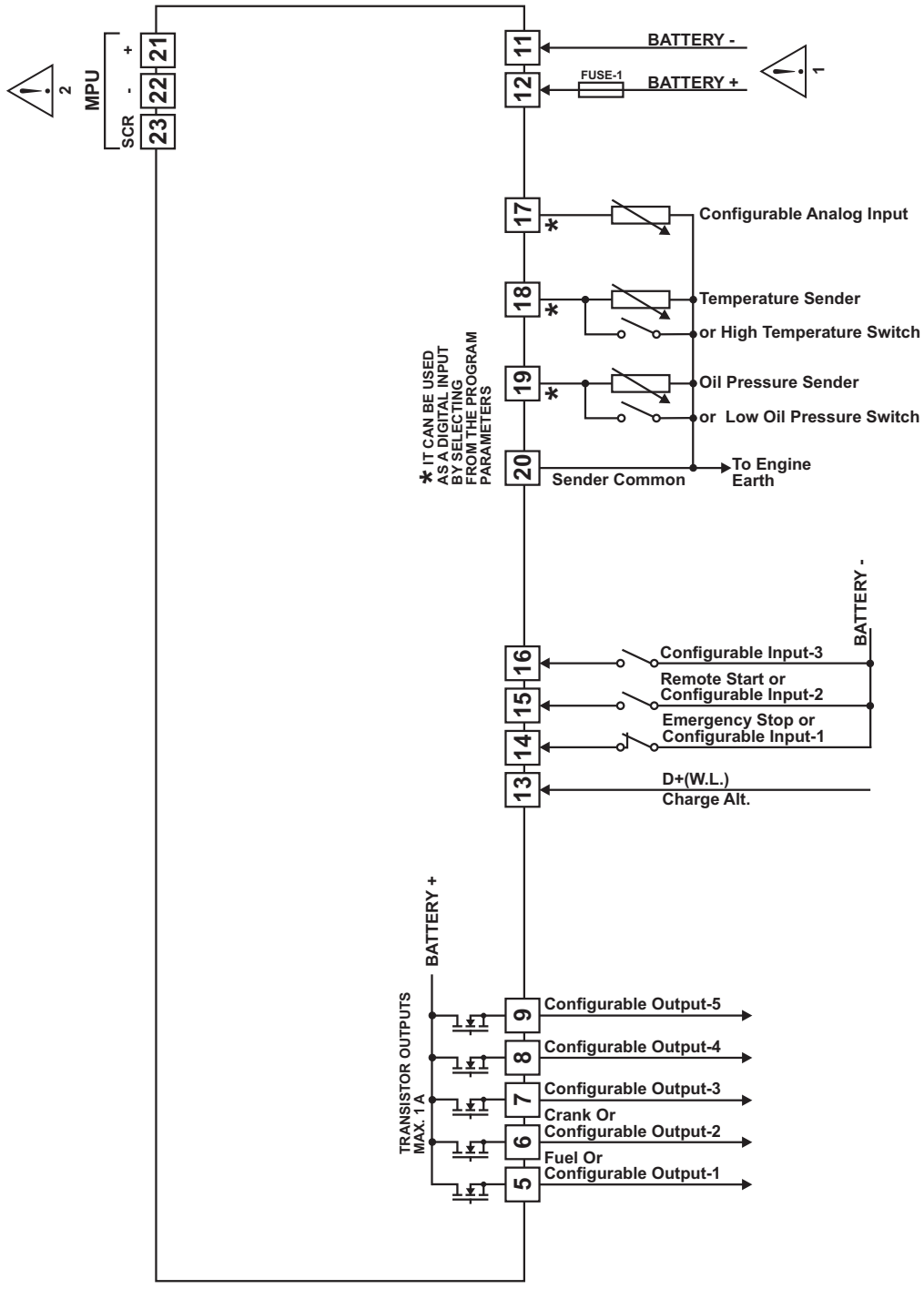

FUSE-1 7A. T

1- Connect the unit as shown in the appropriate diagram. Be sure to connect the battery supply the right way round and battery negative should be grounded. External fuse is recommended. Stranded cable cross section: 1,5mm², Solid cable cross section: 2,5mm², The stripping length is 7 to 9 mm. Supply cables must comply with the requirements of IEC 60277 or IEC 60245.

2- Screened cable must be used for connecting the Magnetic Pickup, ensuring that the screen is grounded at one end ONLY.

3. Changing And Saving Parameters Values

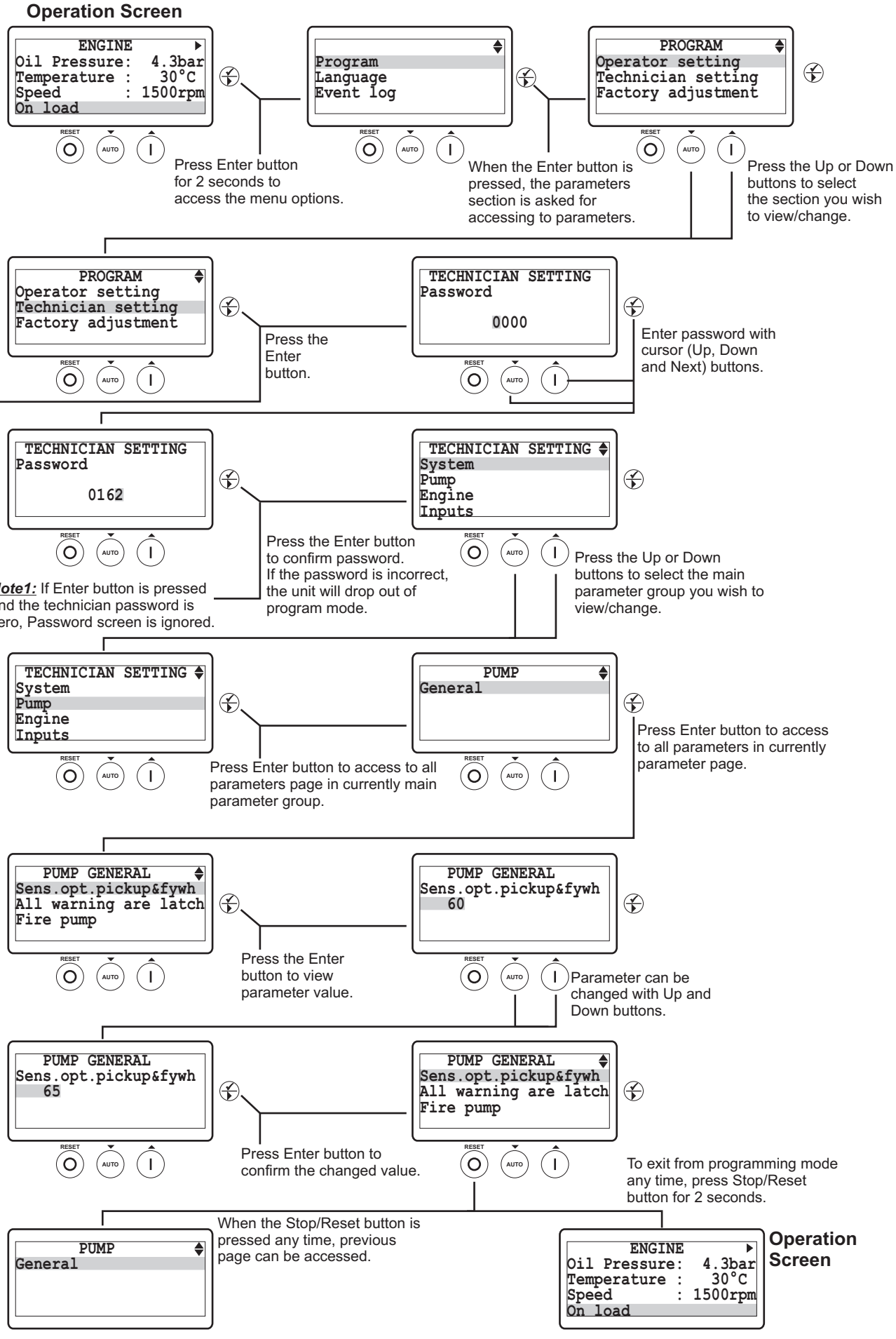

4. Parameters

4.1 Operator Parameters

4.1.1 Engine

ENGINE SPEED SETS (*Engine->Speed settings*)		Min	Max	Default	Unit
Under speed shutdown	Engine Under Speed Shutdown	500(dis)	5000	1290	RPM
Under speed prealarm	Engine Under Speed Prealarm	500(dis)	5000	dis	RPM
Under speed reset	Engine Under Speed Prealarm Reset	500	5000	500	RPM
Over speed shutdown	Engine Over Speed Shutdown	500(dis)	5000	1740	RPM
Over speed prealarm	Engine Over Speed Prealarm	500(dis)	5000	dis	RPM
Over speed reset	Engine Over Speed Prealarm Reset	500	5000	500	RPM
Shutdown delay time	Engine Speed Shutdown Delay Time	0.0	10.0	1.0	Sec

4.2 Technician Parameters

4.2.1 System

LCD DISPLAY (*System->LCD display*)		Min	Max	Default	Unit
Language*1	Language Selection	ENGLISH/CHINESE		ENGLISH	
Contrast	Digital Contrast	4	9	5	
Auto backlight off	Auto Backlight Off	DISBL/ENABL		DISBL	
Auto scroll time	Auto Scroll Time	0 (dis)	250	0	Sec
Auto scroll number	Auto Scroll Number	1	6	3	
Err. mesg scroll time	Scroll Time For Error Messages	1	250	2	Sec

COMMUNICATION (*System->Communication*)		Min	Max	Default	Unit
Slave address	Slave Address	1	247	1	
Baud rate	Baud Rate 0 - 1200 baud 1 - 2400 baud 2 - 4800 baud 3 - 9600 baud 4 - 19200 baud 5 - 38400 baud	0	5	3	
Parity	Parity 0 - NONE 1 - ODD 2 - EVEN	0	2	0	
Stop bit	Stop Bit (0-> 1 stop bit,1-> 2 stop bit)	0	1	0	

Note: *1 = Selectable value of this parameter is “ENGLISH/TURKISH” at Trans-MiniPUMP.XXX (TR) devices.
dis = disable

DATE & TIME SET (*System->Date & time set*)		Min	Max	Default	Unit
RTC	Real Time Clock	DISBL/ENABL		ENABL	
Year	Year	0	99		
Month	Month	1	12		
Day	Date	1	31		
Week	Day of week	1	7		
Hour	Hour	0	23		
Minute	Minute	0	59		
Second	Second	0	59		

DEFAULT SETTINGS (*System->Default settings*)		Min	Max	Default	Unit
Save setting to def.	Save setting to default	YES / NO		NO	
Reset default sets	Reset default sets	YES / NO		NO	
Reset factory sets	Reset factory sets	YES / NO		NO	

PASSWORD SETTINGS (*System->Password settings*)		Min	Max	Default	Unit
Operator password	Operator Password	0	9999	0	
Technician password	Technician Password	0	9999	0	

4.2.2 Pump

PUMP GENERAL (Pump->*General*)		Min	Max	Default	Unit
Sens.opt.pickup&flywh	Sensing Opt Pickup En/Dis & Flywheel	0.0(dis)	999.9	120	
All warning are latch	All Warnings Are Latched En/Dis	DISBL/ENABL		DISBL	
Fire pump	Fire pump Enable or Disable	DISBL/ENABL		DISBL	

Note: dis = disable

4.2.3 Engine

ENGINE START OPTIONS (*Engine->Starting options*)		Min	Max	Default	Unit
Horn prior start	Audible Alarm Prior To Starting En/Dis	ENABL/DISBL		DISBL	
No. of crank attemp	Number Of Start Attempts	1	10	3	
Cranking time	Cranking Time	1	99	5	Sec
Crank rest time	Crank Rest Time	5	99	10	Sec
Pickup fail delay	Pickup Sensor Fail Delay(Pickup)	0.1	10.0	3.0	Sec

ENG. CRANK DISCONNECT (*Engine->Crank disconnect*)		Min	Max	Default	Unit
Engine speed	Crank Disconnect On Engine RPM	500(dis)	6000	501	RPM
Alt. Charge volt	Crank Disconnect On Charge Alt. Voltage	6.0 (dis)	30.0	dis	V⎓
Oil pressure	Crank Disconnect On Oil Pressure	1.0(dis)	30.0	1.0(dis)	BAR

ENGINE SPEED SETS (*Engine->Speed settings*)		Min	Max	Default	Unit
Under speed shutdown	Engine Under Speed Shutdown	500(dis)	5000	1290	RPM
Under speed prealarm	Engine Under Speed Prealarm	500(dis)	5000	dis	RPM
Under speed reset	Engine Under Speed Prealarm Reset	500	5000	500	RPM
Over speed shutdown	Engine Over Speed Shutdown	500(dis)	5000	1740	RPM
Over speed prealarm	Engine Over Speed Prealarm	500(dis)	5000	dis	RPM
Over speed reset	Engine Over Speed Prealarm Reset	500	5000	500	RPM
Shutdown delay time	Engine Speed Shutdown Delay Time	0.0	10.0	1.0	Sec

ENGINE PLANT BATTERY (*Engine->Plant battery*)		Min	Max	Default	Unit
Under volt	Battery Undervolts Warning	6.0(dis)	30.0	10.0	V⎓
Under volt reset	Battery Undervolts Warning Reset	6.0	30.0	10.5	V⎓
Under volt delay	Battery Undervolts Volts Delay	0.0	9.9	1.0	Sec
Over volt	Battery Overvolts Warning	6.0(dis)	30.0	30.0	V⎓
Over volt reset	Battery Overvolts Warning Reset	6.0	30.0	29.5	V⎓
Over volt delay	Battery Overvolts Delay	0.0	9.9	1.0	Sec
Alt. chg. warning	Charge Alternator Warning	6.0(dis)	30.0	dis	V⎓

Note: dis = disable

ENGINE MAINTENANCE (*Engine->Maintenance*)		Min	Max	Default	Unit
Running hour interval	Running Hours Interval	0(dis)	9999	5000	Hour
Maint.date interval	Maintenance Date Interval	0(dis)	12	6	Month
Eng. stop when maint	Force Engine Shutdown When Maintenance Is Due	ENABL/DISBL		DISBL	
Eng.running hour(lsb)	Engine Running Hour (Lsb)	0	255	0	
Eng.running hour	Engine Running Hour	0	255	0	
Eng.running hour(msb)	Engine Running Hour(Msb)	0	14	0	
Maintenance okay	Maintenance Okay	YES/NO		NO	

ENGINE GENERAL (*Engine->General*)		Min	Max	Default	Unit
Fuel selection	Engine Fuel Selection	0-GAS 1-DIESEL 2-GASOLINE		1-DIESEL	
Stop solenoid time	Stop Solenoid Time	5	99	20	Sec
Ignition delay	Ignition Delay	1	99	5	Sec
Gas valve delay	Gas Valve Delay	1	99	5	Sec
Min. of ignition speed	Minimum Ignition Speed	10	1500	200	RPM
Choke time	Choke Time	0.0	30.0	0.8	Sec

4.2.4 Inputs

SENDER INPUTS (*Inputs->Sender inputs*)		Min	Max	Default	Unit
Oil pressure unit	Oil Pressure Unit	BAR/PSI/KPA		BAR	
Oil press. input type	Oil Pressure Input Type	0 - Not Used (Disable) 1 - Digital NC 2 - Digital NO 3 - VDO 5 BAR 4 - VDO 7 BAR 5 - VDO 10 BAR 6 - DATCON 5 BAR 7 - DATCON 7 BAR 8 - MURPHY 7 BAR 9 - User Configured		3	
Oil pressure prealarm	Oil Pressure Pre-Alarm	0.0 (dis)	30.0	1.2	BAR
Oil pressure reset	Oil Pressure Pre-Alarm Reset	0.0	30.0	1.4	BAR
Oil pressure shutdown	Oil Pressure Shutdown	0.0	30.0	1.0	BAR
Temperature unit	Coolant Temperature Unit	ºC/ºF		ºC	
Temp. input type	Coolant Temperature Input Type	0 - Not Used (Disable) 1 - Digital NC 2 - Digital NO 3 - VDO 120 ºC 4 - VDO 150 ºC 5 - DATCON 6 - MURPHY 7 - PT100 8 - User Configured		3	
Temp. sensor break	Temperature Sensor Break	0 - Disable 1 - Enable From Safety On (3min. delayed) 2 - Always Enable		0 (dis)	
High temp. prealarm	High Temperature Pre-Alarm	0 (dis)	300	90	ºC
High temp. reset	High Temp. Pre-Alarm Reset	0	300	88	ºC
High temp. shutdown	High Temperature Shutdown	0	300	95	ºC
Low temp. warning	Low Temperature Warning	0 (dis)	70	0 (dis)	ºC
Conf. AI unit	Configurable Analog Input Unit	BAR/PSI/KPA/ºC/ºF/%/Lt		%	
Conf. AI type	Configurable Analog Input Type	0 - Not Used (Disable) 1 - Digital NC 2 - Digital NO 3 - VDO OHM (10-180) 4 - VDO TUBE (90-0) 5 - US OHM (240-33) 6 - EMS OHM (0-190) 7 - FORD (73-10) 8 - User Configured		0 (dis)	
Conf. AI low prealrm	Configurable Analog Input Low Pre-Alarm	0 (dis)	3000	0 (dis)	%
Conf. AI low reset	Configurable Analog Input Low Reset	0	3000	60	%
Conf. AI low shutdwn	Configurable Analog Input Low Shutdown	0 (dis)	3000	0 (dis)	%
Conf. AI high prealr	Configurable Analog Input High Pre-Alarm	0 (dis)	3000	0 (dis)	%

Conf. AI high reset	Configurable Analog Input High Reset	0	3000	90	%
Conf. AI high shutd.	Configurable Analog Input High Shutdown	0 (dis)	3000	0 (dis)	%
Conf. AI control ON	Configurable Analog Input control ON	0 (dis)	3000	0 (dis)	%
Conf. AI control OFF	Configurable Analog Input control OFF	0	3000	75	%

SENDER LINEARISATION (*Inputs->Sender linearisation*)		Min	Max	Default	Unit
Oil pressure sender 1	Oil Pressure Sender Point-1	0	1300	11	R
Oil pressure 1	Oil Pressure Point-1	0.0	30.0	0.0	BAR
Oil pressure sender 2	Oil Pressure Sender Point-2	0	1300	29	R
Oil pressure 2	Oil Pressure Point-2	0.0	30.0	0.5	BAR
Oil pressure sender 3	Oil Pressure Sender Point-3	0	1300	47	R
Oil pressure 3	Oil Pressure Point-3	0.0	30.0	1.0	BAR
Oil pressure sender 4	Oil Pressure Sender Point-4	0	1300	65	R
Oil pressure 4	Oil Pressure Point-4	0.0	30.0	1.5	BAR
Oil pressure sender 5	Oil Pressure Sender Point-5	0	1300	82	R
Oil pressure 5	Oil Pressure Point-5	0.0	30.0	2.0	BAR
Oil pressure sender 6	Oil Pressure Sender Point-6	0	1300	100	R
Oil pressure 6	Oil Pressure Point-6	0.0	30.0	2.5	BAR
Oil pressure sender 7	Oil Pressure Sender Point-7	0	1300	117	R
Oil pressure 7	Oil Pressure Point-7	0.0	30.0	3.0	BAR
Oil pressure sender 8	Oil Pressure Sender Point-8	0	1300	134	R
Oil pressure 8	Oil Pressure Point-8	0.0	30.0	3.5	BAR
Oil pressure sender 9	Oil Pressure Sender Point-9	0	1300	151	R
Oil pressure 9	Oil Pressure Point-9	0.0	30.0	4.0	BAR
Oil pressure sender 10	Oil Pressure Sender Point-10	0	1300	184	R
Oil pressure 10	Oil Pressure Point-10	0.0	30.0	5.0	BAR
Temperature sender 1	Temperature Sender Point-1	0	1300	291	R
Temperature 1	Temperature Point-1	0	300	40	ºC
Temperature sender 2	Temperature Sender Point-2	0	1300	197	R
Temperature 2	Temperature Point-2	0	300	50	ºC
Temperature sender 3	Temperature Sender Point-3	0	1300	134	R
Temperature 3	Temperature Point-3	0	300	60	ºC
Temperature sender 4	Temperature Sender Point-4	0	1300	97	R
Temperature 4	Temperature Point-4	0	300	70	ºC
Temperature sender 5	Temperature Sender Point-5	0	1300	70	R
Temperature 5	Temperature Point-5	0	300	80	ºC
Temperature sender 6	Temperature Sender Point-6	0	1300	51	R
Temperature 6	Temperature Point-6	0	300	90	ºC
Temperature sender 7	Temperature Sender Point-7	0	1300	38	R
Temperature 7	Temperature Point-7	0	300	100	ºC
Temperature sender 8	Temperature Sender Point-8	0	1300	29	R
Temperature 8	Temperature Point-8	0	300	110	ºC
Temperature sender 9	Temperature Sender Point-9	0	1300	22	R
Temperature 9	Temperature Point-9	0	300	120	ºC
Temperature sender 10	Temperature Sender Point-10	0	1300	15	R
Temperature 10	Temperature Point-10	0	300	140	ºC
Conf. AI sender 1	Configurable Analog Input Sender Point-1	0	1300	10	R
Conf. AI value 1	Configurable Analog Input Point-1	0	3000	0	%
Conf. AI sender 2	Configurable Analog Input Sender Point-2	0	1300	30	R
Conf. AI value 2	Configurable Analog Input Point-2	0	3000	11	%
Conf. AI sender 3	Configurable Analog Input Sender Point-3	0	1300	50	R
Conf. AI value 3	Configurable Analog Input Point-3	0	3000	22	%
Conf. AI sender 4	Configurable Analog Input Sender Point-4	0	1300	70	R
Conf. AI value 4	Configurable Analog Input Point-4	0	3000	33	%
Conf. AI sender 5	Configurable Analog Input Sender Point-5	0	1300	90	R
Conf. AI value 5	Configurable Analog Input Point-5	0	3000	44	%

Conf. AI sender 6	Configurable Analog Input Sender Point-6	0	1300	110	R
Conf. AI value 6	Configurable Analog Input Point-6	0	3000	55	%
Conf. AI sender 7	Configurable Analog Input Sender Point-7	0	1300	130	R
Conf. AI value 7	Configurable Analog Input Point-7	0	3000	66	%
Conf. AI sender 8	Configurable Analog Input Sender Point-8	0	1300	150	R
Conf. AI value 8	Configurable Analog Input Point-8	0	3000	77	%
Conf. AI sender 9	Configurable Analog Input Sender Point-9	0	1300	170	R
Conf. AI value 9	Configurable Analog Input Point-9	0	3000	88	%
Conf. AI sender 10	Configurable Analog Input Sender Point-10	0	1300	190	R
Conf. AI value 10	Configurable Analog Input Point-10	0	3000	100	%

CONF. INPUT-X (*Inputs->Conf. input-x*)		Min	Max	Default	Unit
Dis,user conf.or list	0- Disable 1- User Configured 2- Select From List	0(dis)	2	in1=2 in2=2 in3=0	
Polarity	0- Normally Open (Close To Activate) 1- Normally Close (Open To Activate)	0	1	in1=1 in2=0 in3=0	
Indication	If User Configured 0- Status 1- Warning Non-Latching 2- Warning Latching 3- Electrical Trip 4- Shutdown	0	4	in1=0 in2=0 in3=0	
Activation	If User Configured 0- Active From Starting 1- Active From Safety On 2- Always Active	0	2	in1=2 in2=2 in3=2	
Select from list	If Select From List 0-Reserved 1-Remote Start 2-Reserved 3-Reserved 4-Reserved 5-Reserved 6-Simulate Auto Button 7-Simulate Test Button 8-Reserved 9-Simulate Start Button 10-Simulate Stop Button 11-Reserved 12-Reserved 13-Reserved 14-Reserved 15-Auto Restore Inhibit 16-Auto Start Inhibit 17-Panel Lock 18-Reserved 19-Reserved 20-Reserved 21-Reserved 22-Remote Inhibit 23-Being Found Alive 24-Reserved 25-Low Oil Pressure 26-High Temperature 27-Emergency Stop 28-Low Oil Level	0	28	in1=27 In2=1 in3=4	
Active delay	Input active delay	0	250	in1=0 in2=0 in3=5	Sec

Note-1 : x = 1(input-1), 2(input-2) or 3(input-3)
Note-2 : dis = disable

4.2.6 Outputs

CONF. OUTPUT-1 (*Outputs->Conf. output-1*)		Min	Max	Default	Unit
Polarity	0- Normally Open (Close To Activate) 1- Normally Close (Open To Activate)	0	1	0	
Function	0-NOT USED 1-RESERVED 2-ALARM RESET 3-AUDIBLE ALARM 4-AUTO START INHIBIT 5-RESERVED 6-BATTERY HIGH VOLTAGE 7-BATTERY LOW VOLTAGE 8-RESERVED 9-RESERVED 10-RESERVED 11-CHARGE ALTERNATOR FAILURE 12-COMMON ALARM 13-COMMON ELECTRICAL TRIP ALARM 14-COMMON SHUTDOWN ALARM 15-COMMON WARNING ALARM 16-COOLING FAN AFTER START 17-COOLING FAN AFTER STOP 18-COOLANT TEMPERATURE HIGH PRE-ALARM 19-COOLANT TEMPERATURE HIGH SHUTDOWN 20-COOLING DOWN TIMER IN PROGRESS 21-CRANK RELAY ENERGISED 22-DELAYED ALARMS ACTIVE 23-DIGITAL INPUT1 ALARM 24-DIGITAL INPUT2 ALARM 25-DIGITAL INPUT3 ALARM 26-RESERVED 27-RESERVED 28-RESERVED 29-RESERVED 30-RESERVED 31-RESERVED 32-RESERVED 33-RESERVED 34-RESERVED 35-RESERVED 36-RESERVED 37-RESERVED 38-RESERVED 39-EMERGENCY STOP 40-FAIL TO START ALARM 41-FAIL TO STOP ALARM 42-CONFIGURABLE ANALOG INPUT CONTROL 43-FUEL RELAY ENERGISED 44-GAS ENGINE IGNITION OUTPUT 45-PUMP AT REST 46-PUMP AVAILABLE 47-RESERVED 48-RESERVED 49-RESERVED 50-RESERVED 51-RESERVED 52-RESERVED 53-RESERVED 54-RESERVED 55-RESERVED 56-RESERVED 57-RESERVED 58-RESERVED 59-PUMP STOPPING 60-RESERVED 61-HORN OUTPUT LATCHED 62-HORN OUTPUT PULSED 63-LAMP TEST 64-RESERVED 65-LOSS OF MAGNETIC PICK-UP SPEED SIGNAL 66-LOW TEMPERATURE 67-MAINTENANCE DUE ALARM 68-RESERVED 69-RESERVED 70-RESERVED 71-RESERVED 72-RESERVED 73-RESERVED 74-RESERVED 75-RESERVED 76-RESERVED 77-RESERVED 78-RESERVED 79-OIL PRESSURE LOW PRE-ALARM 80-OIL PRESSURE LOW SHUTDOWN 81-CONFIGURABLE ANALOG INPUT HIGH PREALARM 82-CONFIGURABLE ANALOG INPUT HIGH SHUTDOWN 83-RESERVED 84-RESERVED 85-RESERVED 86-RESERVED 87-OVERSPEED PRE-ALARM 88-OVERSPEED SHUTDOWN 89-PANEL LOCK 90-PRE-HEAT(during preheat timer) 91-PRE-HEAT(until end of cranking) 92-PRE-HEAT(until end of warming) 93-PRE-HEAT(until end safety on) 94-REMOTE START PRESENT 95-REMOTE STOP DELAY IN PROGRESS 96-RESERVED 97-SMOKE LIMITING 98-STARTING ALARM 99-STARTING ALARMS ARMED 100-STOP RELAY ENERGISED 101-SYSTEM IN AUTO MODE 102-SYSTEM IN MANUAL MODE 103-SYSTEM IN STOP MODE 104-SYSTEM IN TEST MODE 105-RESERVED 106-RESERVED 107-RESERVED 108-RESERVED 109-UNDERSPEED PRE-ALARM 110-UNDERSPEED SHUTDOWN 111-WAITING FOR PUMP 112-RESERVED 113-RESERVED 114-RESERVED 115-CONFIGURABLE ANALOG INPUT LOW PRE-ALARM 116-CONFIGURABLE ANALOG INPUT LOW SHUTDOWN 117-RESERVED 118-RESERVED 119-RESERVED 120-RESERVED 121-CHOKE ACTIVE 122-REMOTE CONTROL ACTIVE	0	122	43	

CONF. OUTPUT-2 (*Outputs->Conf. output-2*)		Min	Max	Default	Unit
Polarity	0- Normally Open (Close To Activate) 1- Normally Close (Open To Activate)	0	1	0	
Function	The same as Configurable Output-1 options	0	122	21	

CONF. OUTPUT-3 (*Outputs->Conf. output-3*)		Min	Max	Default	Unit
Polarity	0- Normally Open (Close To Activate) 1- Normally Close (Open To Activate)	0	1	0	
Function	The same as Configurable Output-1 options	0	122	62	

CONF. OUTPUT-4 (*Outputs->Conf. output-4*)		Min	Max	Default	Unit
Polarity	0- Normally Open (Close To Activate) 1- Normally Close (Open To Activate)	0	1	0	
Function	The same as Configurable Output-1 options	0	122	68	

CONF. OUTPUT-5 (*Outputs->Conf. output-5*)		Min	Max	Default	Unit
Polarity	0- Normally Open (Close To Activate) 1- Normally Close (Open To Activate)	0	1	0	
Function	The same as Configurable Output-1 options	0	122	12	

4.2.6 Timers

START TIMERS (*Timers->Start timers*)		Min	Max	Default	Unit
Remote start delay	Remote Start Delay	0	3600	4	Sec
Pre-heat	Pre-Heat	0	250	3	Sec
Pre-heat bypass	Pre-Heat Bypass	0	250	0	Min
Safety on delay	Safety On Delay	0	99	5	Sec
Warming up time	Warmup Time	0	250	3	Sec
Horn duration	Horn Duration	0 (dis)	999	60	Sec
Chg. excitation time	Charge Excitation Time	0	99(cont)	15	Sec
Cooling fan time	Cooling Fan Time	0	250	180	Sec
Idle mode time	Idle Mode Time (Smoke Limiting)	0 (dis)	3600	dis	Sec
Idle mode time off	Idle Mode Time Off (Smoke Limiting Off)	0	250	5	Sec

STOPPING TIMERS (*Timers->Stopping timers*)		Min	Max	Default	Unit
Remote stop delay	Remote Stop Delay	0	250	4	Sec
Cooling time	Cooling Time	0 (dis)	3600	0 (dis)	Sec
Fail to stop delay	Fail To Stop Time	15	99	30	Sec

Note: dis = disable cont = continuous

4.2.7 User Adjustment

BATTERY&CHRG GEN.VOL (*User adjustment->Battery&chrg gen.vol*)		**Min**	**Max**	**Default**	**Unit**
Batt.volt offset	Battery Voltage Offset	-5.0	5.0	0	V⎓
Gen.chg.volt offset	Charge Generator Voltage Offset	-5.0	5.0	0	V⎓

SENDER INPUTS OFFSET (*User adjustment->Sender inputs offset*)		**Min**	**Max**	**Default**	**Unit**
Oil Pressure offset	Oil Pressure Offset	-2.0	2.0	0.0	BAR
Temperature offset	Coolant Temperature Offset	-20	20	0	ºC
Conf. AI offset	Configurable Analog Input Offset	-200	200	0	%

5. Specifications

Equipment use	: Electrical control equipment for generating sets.
Housing & Mounting	:111 mm x 81 mm x 61 mm. (including connectors). Plastic housing for panel mounting.
Panel Cut-Out	: 81mm x 70mm.
Protection Against Mech. Impacts	: 1Joule (IK06).
Protection Class	: IP65 at front panel.
Weight	: Approximately 0,3 Kg.
Environmental rating	: Standard, indoor at an altitude of less then 2000 meters with non-condensing humidity.
Operating/Storage Temperature	: -20°C to +70°C / -30°C to +80°C
Operating/Storage Humidity	: 95 % max. (non-condensing)
Vibration	: EN 60068-2-6 Ten sweeps in each of three major axes 5Hz to 8Hz @ +/-7.5mm, 8Hz to 500Hz @ 2gn.
Shock	: EN 60068-2-27 Three shocks in each of three major axes 15gn in 11mS.
Installation Over Volt. Category	: II Appliances, portable equipment
Pollution Degree	: II, Normal office or workplace, non conductive pollution
Mode of Operation	: Continuous.
Supply Voltage and Power	: 8 to 32 V⎓ (Peak: 36 V⎓) - 3.2W
Cranking Dropouts	: Battery voltage can be “0” VDC for max. 50 ms during cranking (battery voltage should be at least nominal voltage before cranking).
Battery Voltage Measurement	: 8 to 32 V ⎓, accuracy: 1 % FS, resolution: 0,1 V
Magnetic Pickup Input	: 35 to 10000 Hz (4 to 35 volts peak continuously). Accuracy: 0,25 % FS.
Charge Generator Excitation	: 210mA @12V, 105mA @24V. Nominal 2.5W.
Charge Gen. Vol. Measurement	: 8 to 32 V ⎓, accuracy: 1 % FS, resolution: 0,1 V.
Sender Measurement	: 0 to 1300 ohm, accuracy: 1 % FS, resolution: 1 ohm.
Communication interface	: RS-232
Transistor Outputs	: Fuel or Configurable output-1 1A at DC supply voltage Crank or Configurable output-2 1A at DC supply voltage Configurable output-3 1A at DC supply voltage Configurable output-4 1A at DC supply voltage Configurable output-5 1A at DC supply voltage All transistor ouputs supplied from DC supply terminal 12
Approvals	: EAC , CE

6. Other Informations

Manufacturer Information:
Emko Elektronik Sanayi ve Ticaret A.Ş.
Bursa Organize Sanayi Bölgesi, (Fethiye OSB Mah.)
Ali Osman Sönmez Bulvarı 2. Sokak, No:3
16215 Nilüfer - BURSA / TÜRKİYE
Phone : +90 224 261 19 00
Fax : +90 224 261 19 12

Repair and maintenance service information:
Emko Elektronik Sanayi ve Ticaret A.Ş.
Bursa Organize Sanayi Bölgesi, (Fethiye OSB Mah.)
Ali Osman Sönmez Bulvarı 2. Sokak, No:3
16215 Nilüfer - BURSA / TÜRKİYE
Phone : +90 224 261 19 00
Fax : +90 224 261 19 12

7. Order Information

Trans-MiniPUMP **:** Auto Start Pump controller, speed sensing from Magnetic Pickup.

Note: Devices have time clock. If real time clock is needed, “RTC” expression must be added to end of order code.
Example: Trans-MiniPUMP.RTC

PC Software

https://www.emkoelektronik.com.tr/en/products/trans-minipump

PRC Technologies Corp., Ltd. ลาดพร้าว 101 กรุงเทพ 10240
โทรศัพท์ : 02 530 1714, 02 932 1711 มือถือ : 086 360 8600
อีเมล : contact@prctech.net LINE ID1 : prctec-info, LINE ID2 : @prct